RECEPTION SETS R.107
GENERAL DESCRIPTION AND WORKING INSTRUCTIONS

ZA 3220

NOT TO BE PUBLISHED

NOTE

The information given in this document is not to be communicated, either directly or indirectly, to the Press or to any person not holding an official position in His Majesty's Service.

CONTENTS.

Page.

CHAPTER I - GENERAL DESCRIPTION..... 5

1. Purpose..... 5
2. Frequency Range..... 5
3. Performance..... 5
4. Power Supply..... 5
5. Aerial..... 6
6. Circuit and Controls..... 6
7. Panel Sockets..... 7
8. Panel Jacks..... 8
9. Construction..... 8
10. Weight and Dimensions..... 8

CHAPTER II - WORKING INSTRUCTIONS..... 9

1. Preliminary..... 9
   TABLE I - Valves used..... 9
2. Connecting up power supply..... 9
   (a) Battery operation..... 9
   (b) A.C. mains operation..... 10
3. Operating the receiver..... 10
   (A) For R.T. reception..... 10
   (B) For C.W. reception..... 11
4. Use of the crash limiter..... 12

CHAPTER III - MAINTENANCE..... 13

1. General notes on maintenance..... 13
2. Test figures..... 13
   (a) Receiver test panel..... 13
   TABLE II - Receiver test panel readings... 14

CONTENTS (Cont'd)

Page

(b) Point to point resistance tests:
R.F. Chassis..... 14

TABLE IIIA - Tag Panel A..... 16

" IIIB - Valveholder V1A..... 17

" IIIC - " V1B..... 17

" IIID - " V2A..... 18

I.F/A.F. Chassis.

TABLE IVA - Tag Panel B..... 19

" IVB - " " C..... 20

" IVC - Test Panel..... 21

" IVD - Valveholder V1C..... 22

" IVE - " V1D..... 22

" IVF - " V2A'..... 23

" IVG - " V2B..... 23

" IVH - " V2B'..... 24

Power Chassis.

TABLE VA - Tag Panel D..... 25

" VB - " " D and Valveholder V3A..... 26

" VC - " " D " Vibrator Socket..... 26

" VD - D.C. Supply Socket..... 26

" VE - Muting and Sidetone Socket..... 27

" VF - A.C. Supply Socket..... 27

" VG - Panel Jacks..... 28

C. Voltage tests..... 28

TABLE VI - Voltage tests..... 28

CONTENTS (Cont'd).

Page.

3. Receiver sensitivity tests..... 29

General..... 29

(a) 2nd A.F. stage..... 29

(b) 1st A.F. stage..... 29

(c) 2nd I.F. stage..... 29

(d) 1st I.F. stage..... 29

(e) F.C. stage..... 29

(f) Overall sensitivity..... 29

(g) Beat frequency oscillator..... 30

4. Location of faults..... 30

A. A.F. and preceding stages..... 30

B. R.F. unit..... 31

C. Special note on valve faults..... 31

D. Inspection of wiring and coils..... 31

E. Receiver faults - Table VII..... 32

5. Information for guidance of R.A.O.C. workshops..... 37

(A) Notes on alignment of circuits..... 37

(B) Dismantling Instructions..... 38

(C) Special receiver faults..... 40

TABLE VIII - Special receiver faults..... 40

DIAGRAMS.

1. Reception Sets R.107 Circuit diagram.
2. " " " Front view of panel.
3. " " " Plan view of interior.
4. " " " Connections to Sender No.12.
5. " " " Connections to Sender No.33.

16/4/41.

PLATES:

I. Front Panel.
II. Plan of Interior.
III. Tuning Unit.
IV. Underside of R.F. Chassis.
V. Underside of I.F. Chassis.
VI. Interior of B.F.O. Unit.
VII. Underside of Power Unit.

COMPONENTS LIST:

Condensers..... 42
Resistors..... 46
Inductors 48
Switches 49
Transformers..... 49
Miscellaneous..... 49
Valves..... 50
Coding for Condensers and Resistances..... 51

NOTE.

Replacement Components.

When it is found necessary to replace Components having a nominal value which differs from that stated herein, the replacement Component should have the value indicated in these instructions.

DELETIONS.

Owing to circuit changes the following Components will no longer be found in the Set, Diagram I, and Components List:-

CONDENSERS..... C19A, C24A.

RESISTANCES..... R4A, R6C.

CHAPTER I - GENERAL DESCRIPTION.

1. Purpose.

The Reception Set R.107 is a nine valve (eight plus rectifier) superheterodyne receiver which is designed for receiving both C.W. and R.T. signals. It is used particularly in conjunction with the Wireless Sets No.12 and No.33.

2. Frequency range.

The frequency range of the receiver is 1.2 to 17.5 M.c/s which is covered in three sub-ranges:-

Range 1	17.5	-	7.0	M.c/s.
Range 2	7.25	-	2.9	"
Range 3	3.0	-	1.2	"

3. Performance.

(i) Sensitivity.

The sensitivity of the receiver for a signal to noise ratio of 20 db., is about 1 microvolt on C.W. telegraphy and 2 to 6 microvolts on R.T. with carrier wave modulated 30% at 400 c/s. This is measured with the bandwidth switch in the narrow position.

(ii) Selectivity.

Either of two bandwidths may be selected by means of the bandwidth switch marked "WIDE" and "NARROW". In the "NARROW" position the bandwidth is 3 k.c/s for -6 db. with an average cut-off slope of 15 db. per k.c/s. In the "WIDE" position the bandwidth is 7.5 k.c/s for -6 db. with an average cut-off slope of 12 db. per k.c/s.

(iii) Audio frequency filter.

The filter is placed between the A,F. stages and has a pass-band of about 300 c/s, the mid-frequency being about 900 c/s. The filter may be switched in or out of circuit as desired with the two-way switch marked "AUDIO FILTER".

4. Power Supplies.

The receiver will operate with A.C. supplies of 100 to 250 volts or with a 12 volt accumulator. A two-way switch is provided at the rear of the power chassis in order to change-over from A.C. to D.C. operation (see Diagram 3).

When operated on A.C. supplies the power consumption is 31 watts.

When operated on D.C. the current drawn from a 12 volt battery is 3.0 amps.

5. Aerial.

The high sensitivity of the set enables it to operate efficiently with a very small aerial, not longer than 20 feet.

If interference from electrical apparatus exists at the station site it may be sufficiently severe to interfere seriously with the operation of the receiver.

In these circumstances, the erection of a dipole is advised, connected by a 70 ohm feeder line to the dipole terminals of the receiver.

The dipole should consist of two equal arms cut to be effectively a quarter wave long from a frequency of about 8 M.c/s, i.e. two arms 30 ft. in length totalling 60 ft. overall. The two inner ends of the dipole should terminate at a pair of insulators 6 inches apart and separated by a ropelink. The two wires are then connected direct to the 70 ohm feeder cable. Suitable cable for this purpose is "Telcon" type BA11C or Cord Electric "U" Twin Low 0017 (or even Q15).

Where a Vertical Rod vehicle aerial is used, best results will generally be obtained when it is connected to the left hand "DIPOLE FEEDER" terminal of the set. The roof aerial (mattress type) will usually be found to be of low impedance and should therefore be connected to the left hand "DIPOLE FEEDER" terminal, while the earth wire is connected to the right hand terminal as well as to the receiver earth terminal proper.

6. Circuit and Controls.

The circuit arrangement of the receiver (see Diagram 1) is as follows:-

R.F. (signal-frequency) Amplifier, Oscillator, Frequency-changer, two I.F. stages (465 k.c/s), second detector - A.V.C. - A.F. Amplifier, Output Stage and Heterodyne Oscillator (beat). Three types of valve are used, i.e. ARP.34 (EF.39), AR.21 (EBC.33) and 6X5G. A 12 volt non-synchronous type vibrator is used for battery operation. A monitor loud-speaker is mounted on the panel.

There are 14 controls on the front panel (see Diagram 2) as follows:-

1. "POWER ON/OFF" SWITCH.)
2. "SIDETONE" SWITCH.) Associated with power chassis.
3. "LS" SWITCH.)
4. "TEL OUTPUT" CONTROL.)

5.	"AUDIO FILTER" SWITCH.	Associated with I.F.chassis
6.	"LIM. ON/OFF" "	
7.	"B.F.O.-A.V.C." "	
8.	"I.F. NARROW/WIDE" SWITCH.	
9.	"B.F.O." TUNING CONTROL.	
10.	"AUDIO GAIN" CONTROL.	
11.	"R.F. GAIN" "	
12.	MAIN TUNING CONTROL.	Associated with R.F.chassis
13.	"AERIAL TRIMMER".	
14.	"RANGE" SWITCH.	

In addition to these controls an A.C/D.C. switch is provided inside the receiver towards the rear of the power chassis.

The main tuning control gangs the three R.F. signal-frequency and oscillator circuits.

Other controls provide for waveband switching, R.F. and A.F. gain, adjustment of the beat oscillator and 'phone output. The aerial trimmer adjustment is provided for matching the set to any particular aerial and thus obtain the maximum aerial circuit gain.

The switches are provided for bringing into circuit the speaker, sidetone, a "crash limiter", an A.F. band-pass filter for 900 c/s and adjusting the bandwidth of the I.F. amplifier.

At the front of the receiver a test panel is provided at which the cathode current of the valves may be checked with an external voltmeter.

7. Panel Sockets.

A group of three sockets is provided on the lefthand end of the front panel as follows:-

(a) "MUTING AND SIDETONE" Socket.

This is a three pin socket at the top of the group and is coupled via a tricore cable to the Sender or via a two core cable to its remote control unit (see Diagrams 4 and 5).

In both cases, when the transmitter comes into operation, contacts on a relay mounted on the receiver I.F. amplifier chassis are closed to mute the receiver. When the receiver is coupled to the Sender, sidetone from the Sender is applied to a 150 ohm winding on the receiver output transformer so that the sidetone can be heard on the built-in speaker, or on 'phones.

(b) "D.C. SUPPLY" Socket.

For battery operation a 12 volt accumulator is coupled to the 4 pin socket in the middle of the Group.

The upper and the lower pairs of pins are connected together in the receiver.

(c) "A.C. SUPPLY" Socket.

A.C. supply is connected to the set via the two pin socket at the bottom of the group.

8. Panel Jacks.

Three panel jacks are provided towards the left of the receiver.

The lower pair having large entry holes in the moulded plate are wired in parallel for C/LR phones.

The upper jack is for connection to a 600 ohm line.

9. Construction.

The main feature in the construction of the set is the use of three separate chassis-units, i.e. R.F., I.F/A.F. and Power.

The receiver has a sheet steel panel and chassis framework on which the three chassis are mounted, and is enclosed in a sheet steel case.

A detachable cover protects the controls when the instrument is not in use. The cover is designed to fit on to both the front and the back of the set so that the cover shall not be mislaid. In both cases the cover is secured with four captive screws.

Two vertical handles are provided on the front panel for withdrawing the receiver from its case and to serve as supports when detailed examination of the underside of the set is necessary.

10. Weight and Dimensions.

The approximate weight and overall dimensions of the set are as follows:-

Weight.	Length.	Height.	Depth.
96 lbs.	24 ins.	13 ins.	17 1/4 ins.

The carrying frame weighs 10½ lbs.

16/4/41.

CHAPTER II - WORKING INSTRUCTIONS.

1. Preliminary.

(a) See that nine valves (see Diagram 3) are in place in the set as under, viewed in order from the right front looking at the front of the set.

TABLE I - VALVES USED.

V1A	R.F. Amplifier	A.R.P.34	(EF.39).
V1B	Frequency-changer.	"	"
V1C	1st I.F.Amplifier.	"	"
V1D	2nd I.F. "	"	"
V2A	Heterodyne Oscillator.	A.R.21.	(EBC.33).
V2A'	Beat Oscillator for C.W.	"	"
V2B	1st A.F.Amplifier.	"	"
V2B'	2nd A.F. "	"	"
V3A	Rectifier.		(6X5G).

Check that all valve caps are firmly in position and that the vibrator is pressed well down.

(b) Connect to the left hand "DIPOLE FEEDER" terminal of the set, an aerial about 20 feet long and an earth connection, as short as possible, to the "EARTH" terminal OR,

(c) If interference is present erect a dipole aerial as described in Chapter I page 6.

(d) Plug in one or two pairs of C/LR phones as required.

(e) Set the "POWER ON/OFF" switch on the receiver to "OFF".

2. Connecting up the power supply.

(a) Battery operation.

(i) Set the "A.C/D.C." switch at D.C.

(ii) Check that the power transformer cover is clamped down firmly.

(iii) Insert the four point battery plug in which the top pair of contacts should be connected to one pole of the battery and the bottom pair of contacts to the other pole.

NOTE: It is not important which way round the battery is connected but the top contacts are directly connected internally to the receiver earth.

(b) A.C. mains operation.

(i) Set the "A.C/D.C." switch at A.C.

(ii) Remove the power transformer cover from the power chassis and adjust the primary tappings of the transformer to the voltage of the A.C. supply. Replace the transformer cover and clamp down firmly.

(iii) Insert the two point mains plug on the front panel.

3. Operating the receiver.

(A) For R.T. reception.

(a) Select the desired frequency band by the "RANGE" switch.

(b) Adjust the "TEL. OUTPUT" control to about "5".

(c) Adjust the "AUDIO GAIN" control to about "5".

(d) Adjust the "R.F. GAIN" control to maximum.

(e) Adjust "AERIAL TRIMMER" to about "5".

(f) Set the:

"LS" Switch to "ON" if required.

"B.F.O. - A.V.C." Switch to "A.V.C".

"AUDIO FILTER" " " "OFF".

"LIM." " " "OFF".

"I.F." " " "WIDE".

(g) Set "POWER ON/OFF" switch at "ON" and note that the pilot lamp at the top of the panel lights up.

(h) Search for the desired signal by rotating the main tuning control.

(j) Having found the signal, adjust the "AERIAL TRIMMER" for maximum output.

(k) Adjust the "AUDIO GAIN" control to give a satisfactory volume level for easy reception.

NOTE: When the A.V.C. is on, the R.F. gain of the receiver is maintained automatically at a suitable level by the A.V.C. circuit and the "R.F. GAIN" control should be turned to maximum (fully clockwise).

(B) For C.W. Reception.

(a) Select the desired frequency band by the "RANGE" switch.

(b) Adjust the "TEL. OUTPUT" control to about "5".

(c) Adjust the "AUDIO GAIN" control to about "5".

(d) Adjust the "R.F. GAIN" control to maximum.

(e) Adjust "AERIAL TRIMMER" to about "5".

(f) Set the:

"L/S" Switch to "ON" if required.

"B.F.O.-A.V.C." switch to "B.F.O."

"AUDIO FILTER" " " "OFF".

"LIM." " " "OFF".

"I.F." " " "NARROW".

(g) Set "POWER ON/OFF" switch at "ON" and note that the pilot lamp at the top of the panel lights up.

(h) Set "B.F.O." dial with the indicator at the zero mark.

(j) Search for the desired signal by rotating the main tuning control.

(k) Readjust the "B.F.O." dial to give a beat note of convenient pitch.

(l) Having found the signal adjust the "AERIAL TRIMMER" for maximum output.

(m) Adjust the "AUDIO GAIN" and "R.F. GAIN" controls to give a satisfactory signal level for easy reception. In general the "R.F.GAIN" control should be set to a low value.

(n) Using the Audio Filter.

Background noise or other interference may be greatly reduced by means of the "AUDIO FILTER".

Adjust the beat note of the signal to about 900 c/s by means of the "B.F.O." control and set the "FILTER" switch to "ON" (if the beat note is approximately 900 c/s there will be little change of signal strength with the FILTER in or out).

4. Use of the "crash limiter".

This is primarily intended for use on C.W. reception, to reduce atmospheric or other transient interference. However, it may be used on Telephony at somewhat reduced efficiency provided that the speech output is kept at a low level.

16/4/41.

CHAPTER III - MAINTENANCE.

1. General Notes on Maintenance.

(a) The set should be kept free from dust and dirt.

(b) Examine the spring loaded terminals to see that they are in good working order and the lugs to see that they are clean.

(c) All plugs should be pushed right "home" in their sockets.

(d) Take care that the pointer of the main tuning condenser is not disturbed on the driving shaft as this will affect the accuracy of calibration.

(e) Do not disturb the cloth dust cover of the loudspeaker and see that no metallic particles such as iron filings fall near the loudspeaker.

2. Test Figures.

(a) Receiver test panel.

The test panel (see Diagram 2) on the front of the receiver is provided so that the cathode current of each valve can be checked when necessary, without removing the receiver from its case. The test points are marked to correspond with the coding of the valve circuits concerned, as indicated in Table 1, page 8.

Testing is carried out by measuring the voltage drop across a 3000 ohm resistance connected in series with the H.T. supply to the individual valves, i.e. between the common test point marked + and each of the other test points. An Avometer should be connected with its positive lead to the + point and its negative lead to the coded test point. The approximate voltage readings which may be expected are given in the table below for guidance, but it should be noted that these readings apply for a particular range setting of a particular type of meter, i.e. 100 volt range of Avometer Model 7 which has a resistance of 500 ohms per volt.

T A B L E II.

TEST PANEL READINGS.

Location of Circuit.	Test between.	Reading in volts.
R.F. Valve V1A in R.F. chassis.	+ and 1A.	15.0+
F.C. " V1B " " "	+ " 1B.	11.5
Het.Osc.Valve V2A in R.F.chassis.	+ " 2A.	11.0 Range I. 5.0 " II. 5.0 " III.
1st I.F.valve V1C in I.F. chassis.	+ " 1C.	16.5+
2nd I.F. " V1D " " "	+ " 1D.	16.5+
B.F.O. " V2A' " " "	+ " 2A'.	9.5 B.F.O. On. 0 " Off.
1st A.F. " V2B " " "	+ " 2B.	9.5
2nd A.F. " V2B' " " "	+ " 2B'.	20.0

+No signal, i.e. Aerial Terminals shorted and R.F. Gain Control at max. (fully clockwise).

If the meter fails to read or if the reading is appreciably less than the figures given above try replacing the corresponding valve.

(b) Point to point resistance tests.

In the event of the above readings being correct or the replacing of a valve failing to improve a low reading, further investigation can be made at the tag panels at the back of the receiver. It is necessary, however, to withdraw the receiver completely from its case, which is accomplished by unscrewing the three securing bolts shown in Diagram 3, and pulling the receiver forward from the case by means of the vertical handles at the ends of the front panel.

Four tag panels (see Diagrams 1 and 3) are fitted at the back of the receiver chassis and are marked as follows:-

A on the R.F. chassis.

B at the lefthand side of the I.F. chassis viewed from the back of the set.

C at the righthand side of the I.F. chassis viewed from the back of the set.

The following Tables III, IV and V give the resistance readings to be expected between selected points on the tag panels and chassis.

It should be noted, however, that variations of ± 20 per cent of these figures may be expected and no action need be taken if the readings are within this tolerance.

IMPORTANT NOTE: Check that the mains and battery input plugs are removed before making resistance measurements.

16/4/41.

RESISTANCE VALUES BETWEEN POINTS ON THE R.F. CHASSIS.

TABLE IIIA - Tag Panel A.

Test between.	RESISTANCE.	
	External wiring in place & valves in holders.	No external wiring and valves and lamps removed
Tag A3 and chassis.	Zero.	Zero.
" A3 " tag A1.	45,000 ohms.	45,000 ohms.
" A3 " " A2. A.C/D.C. switch at A.C.	Very low.	Infinity.
Tag A3 and tag A4. A.V.C. off. A.V.C. on.	Zero. 0.75MΩ	" "
" A3 and tag A5.	0-4000Ω as R.F. gain is rotated anticlockwise.	"
" A3 and tag A6.	51,000 ohms.	"
" A3 " " A7.	7.5 ohms.	"
" A3 " " A8.	48,000 ohms.	48,000 ohms.
" A3 " " A9.	48,000 ohms.	48,000 ohms.
" A3 " " A10.	48,000 ohms.	48,000 ohms.
" A3 " " A12.	48,000 ohms.	48,000 ohms.
" A3 " " Y at corner of chassis.	45,000 ohms.	Infinity.
Tag A1 and tag A8.	3,000 ohms.	3,000 ohms.
" A1 " " A9.	3,000 ohms.	3,000 ohms.
" A1 " " A10.	3,000 ohms.	3,000 ohms.
" A1 " " A12.	3,000 ohms.	3,000 ohms.
" A8 " " A9.	6,000 ohms.	6,000 ohms.
" A8 " " A10.	Zero.	Zero.
" A9 " " A12.	Zero.	Zero.
" A10 " " A12.	6,000 ohms.	6,000 ohms.

(Note that tag 11 is not used).

R.F. RESISTANCE VALUES (Cont'd).

TABLE IIIB - Valveholder V1A.

Test between.	RESISTANCE. External wiring in place & valves in holders.	No external wiring and valves removed.
Grid connector and chassis A.V.C. off. A.V.C. on.	 0.25MΩ 1.0MΩ	 Infinity. "
Grid connector and tag A4.	0.25MΩ	0.25MΩ
Socket 1 and chassis (A3).	-	Zero.
" 2 " " "	-	Zero.
" 3 " tag A1.	-	8,000 ohms.
" 3 " " A12.	-	5,000 ohms.
" 4 " " A1.	-	25,000 ohms.
" 4 " " A9.	-	28,000 ohms.
" 4 " " A3.	-	20,000 ohms.
" 5 " chassis (A3).	-	Zero.
" 7 " socket 2 on valveholder V1B.	-	Zero.
" 7 and chassis (A3).	-	Infinity.
" 8 " tag A5.	-	300 ohms.

TABLE IIIC - Valveholder V1B.

Grid connector and chassis.	5,000 ohms.	5,000 ohms.
Socket 1 and chassis (A3).	-	Zero.
" 2 " tag A2.	-	Infinity.
" 2 " socket 7 on valveholder V1A.	-	Zero.
" 3 and tag Y at the corner chassis.	-	Zero.
" 3 and chassis (A3).	-	Infinity.
" 4 and tag A6.	-	80,000 ohms.
" 5 and chassis (A3).	-	50,000 ohms.
" 7 " " "	-	Infinity.
" 7 " tag A2.	-	Zero.
" 8 " " A3.	-	5400 ohms.
" 8 " grid connector.	-	400 ohms.

R.F. RESISTANCE VALUES (Cont'd).

TABLE IIID - Valveholder V2A.

Test between.	RESISTANCE.	
	External wiring in place and valves in holders	No external wiring and valves removed.
Grid connector & chassis	50,000 ohms.	50,000 ohms.
Socket 1 and chassis (A3).	-	Zero.
" 2 " " "	-	Infinity.
" 2 " tag A7.	-	4 ohms.
" 3 " tag A1.	-	28,000 ohms with range switch in position 1. 108,000 ohms with range switch in positions 2 & 3.
Socket 7 and chassis (A3)	-	Very low.
" 7 " tag A7.	-	Infinity.
" 8 " chassis (A3).	-	Very low.

20/6/41.

RESISTANCE VALUES BETWEEN POINTS ON THE I.F. CHASSIS.

TABLE IVA - Tag Panel B.

Test between.	RESISTANCE.	
	External wiring in place and valves in holders.	No external wiring and valves and lamps removed.
Tags B1 and C1.	Zero.	Zero.
" B2 " C2.	"	"
" B3 " C3.	"	"
Tag B3 and chassis.	"	"
" B3 " tag B1.	45,000 ohms.	Infinity.
" B3 " " B2. A.C/D.C. switch at A.C. " " " D.C.	 Very low. 2.5 ohms.	 "
Tag B3 and tag B4. A.V.C. switched off. A.V.C. " on.	 Zero. 0.75MΩ	 Zero. 0.75MΩ.
Tag B3 and tag B5. rotating R.F. gain control in anti-clockwise direction.	0 - 4,000 ohms.	0 - 4,000 ohms.
Tag B3 and tag B6.	51,000 ohms.	Infinity.
" B3 " " B7.	3.5 ohms.	"
" B3 " " B8.	48,000 ohms.	"
" B3 " " B12.	48,000 ohms.	"
" B1 " " B2.	45,000 ohms.	"
" B1 " " B6.	3,000 ohms.	3,000 ohms.
" B1 " " B8.	3,000 ohms.	Infinity.
" B1 " " B12.	3,000 ohms.	"
" B1 " lead X.	28,000 ohms.	28,000 ohms.

(Note that tags B9, B10 and B11 are not used).

16/4/41.

I.F. RESISTANCE VALUES (Cont'd).

TABLE IVB - Tag Panel C.

Test between	RESISTANCE.	
	External wiring in place and valves in holders.	No external wiring and valves and lamps removed.
Tag C1 and tag C4.	17,000 ohms.	17,000 ohms.
" C3 " " C1.	45,000 "	Infinity.
" C3 " " C2. A.C/D.C.switch at A.C.	Very low.	"
Tag C3 and tag C4.	62,000 ohms.	"
" C3 " " C5. (Limiter switch off).	+14 "	+14 ohms.
Tag C3 and tag C6.	°28 "	°28 "
" C3 " " C7.	¤1.3 "	¤1.3 "
Tag C3 and tag C8.	Varies between 0 and 250 ohms when 'phone vol. control is rotated clockwise.	Infinity.
Tag C3 and tag C9.	"	"
" C5 " " C6.	+14 ohms.	+14 ohms.
" C5 " " C9.	Varies between +14 ohms and 250 ohms when 'phone vol.control is rotated clockwise.	Infinity.
Tag C8 and tag C9.	Zero.	Zero.

(Note that tags C10, C11 and C12 are not used).

°Resistance of 600 ohms secondary of output transformer S.2.

+ " " one half of this winding " "

¤ " " 10 ohm secondary winding " " S.1.

16/4/41.

I.F. RESISTANCE VALUES (Cont'd).

TABLE IVC - Test Panel.

Test between.	RESISTANCE. External wiring in place and valves in holders.	No external wiring and valves and lamps removed.
+ and tag B1 or C1.	Zero.	Zero.
+ " test point 1A.	3,000 ohms.	Infinity.
+ " " " 1B.	3,000 "	3,000 ohms.
+ " " " 1C.	3,000 "	3,000 "
+ " " " 1D.	3,000 "	3,000 "
+ " " " 2A.	3,000 "	Infinity.
+ " " " 2A'.	3,000 "	3,000 ohms.
+ " " " 2B.	3,000 "	3,000 "
+ " " " 2B'.	3,000 "	3,000 "
+ " lead X.	28,000 "	28,000 "
1A and tag B12.	Zero.	Zero.
1B " " B6.	"	"
2A " " B8.	"	"
Lamp Operators Socket:-		
Tag B2 and Lower Socket.	100 ohms.	100 ohms.
" B3 " Upper "	Zero.	Zero.

16/4/41.

I.F. RESISTANCE VALUES (Cont'd).

TABLE IVD - Valveholder V1C.

Test between.	RESISTANCE. External wiring in place and valves in holders.	RESISTANCE. No external wiring and valves and lamps removed.
Grid connector and chassis A.V.C. on. A.V.C. off.	 1.00MΩ 0.25MΩ	 1.00MΩ 0.25MΩ
Socket 1 and chassis.	-	Zero.
" 2 " tag B7.	-	"
" 3 " " B1.	-	8,000 ohms.
" 3 " test point 1C.	-	5,000 "
" 4 " tag B1.	-	103,000 ohms.
" 4 " test point 1C.	-	100,000 "
" 5 " tag B3 or chassis.	-	Zero.
" 7 " tag B2.	-	"
" 8 " chassis.	-	+500 to 4500 ohms.

TABLE IVE - Valveholder V1D.

Grid connector and chassis A.V.C. on. A.V.C. off.	 1.00MΩ 0.25MΩ	 1.00MΩ 0.25MΩ
Socket 1 and chassis.	-	Zero.
" 2 " socket 7 on valveholder V2A'.	-	Zero.
" 3 and tag B1.	-	8,000 ohms.
" 3 and test point 1D.	-	5,000 ohms.
" 4 " " " 1D.	-	100,000 ohms.
" 4 " tag B1.	-	103,000 ohms.
" 5 " chassis.	-	Zero.
" 7 " tag B2.	-	Zero.
" 7 " chassis.	-	Infinity.
" 8 " "	-	+500 to 4500 ohms.

I.F. RESISTANCE VALUES (Cont'd).

TABLE IVF - Valveholder V2A'.

Test between.	RESISTANCE. External wiring in place and valves in holders.	No external wiring and valves and lamps removed
Grid connector and chassis.	50,000 ohms.	50,000 ohms.
Socket 1 and chassis.	-	Zero.
" 2 " tag B2.	-	Infinity.
" 2 " chassis.	-	Zero.
" 3 " tag B1.	-	33,000 ohms.
" 3 " test point 2A'.	-	30,000 "
" 7 " socket 2 on valveholder V1D.	-	Zero.
" 8 and chassis.	-	Very low.

TABLE IVG - Valveholder V2B.

Grid connector & chassis.	0 - 0.5MΩ as A.F. gain control is rotated clockwise.	0-0.5MΩ as A.F. gain control is rotated clockwise.
Socket 1 and chassis.	-	Zero.
" 2 " "	-	Zero.
" 3 " tags B1 or C1	-	23,000 ohms.
" 3 " test point 2B	-	20,000 ohms.
" 4 " chassis.	-	0.5MΩ
" 5 " "	-	"
" 7 " "	-	Infinity.
" 7 and socket 7 on valveholder V2B'.	-	Zero.
" 8 and chassis.	-	1,000 ohms.

I.F. RESISTANCE VALUES (Cont'd).

TABLE IVH - Valveholder V2B'.

Test between.	RESISTANCE.	
	External wiring in place and valves in holders	No external wiring and valves and lamps removed.
Grid connector & chassis.	100,000 ohms.	100,000 ohms.
Socket 1 and chassis.	-	Zero.
" 2 " tag B2.	-	Zero.
" 3 " test point 2B'.	-	200 ohms (output transformer).
" 3 " tags B1 and C.1.	-	3,200 ohms.
" 7 " socket 7 on valveholder V2B.	-	Zero.
Socket 8 and chassis.	-	500 ohms.

16/4/41.

RESISTANCE VALUES BETWEEN POINTS ON THE POWER CHASSIS.

TABLE VA - Tag Panel D.

Test between.	RESISTANCE.	
	External wiring in place and valves & vibrator in holders.	No external wiring and valves and vibrator removed.
Tag D3 and chassis.	Zero.	Zero.
" D3 " tag D1.	?45,000 ohms shunted by electrolytics.	Leakage 8μF electrolytics.
" D3 " " D2. A.C/D.C. switch at A.C. " " " D.C.	 Very low. 2.5 ohms.	 Very low. 75 ohms.
Tag D3 and tag D4.	62,000 ohms.	Infinity.
" D3 " " D5.	14 ohms limiter off.	Infinity.
" D3 " " D6.	28 ohms.	"
" D3 " " D7. L.S. switched off. " " on.	 1.3 ohms. 1.2 "	 500 ohms. 13 "
Tag D3 and tag D8:- L.S. switched off. " " on.	 *Varies between 0 and 130 ohms. -ditto-	 *Varies between 0 and 500 ohms. *Varies between 0 and 130 ohms.
Tag D3 and tag D9.	*Varies between 0 and 130 ohms.	Infinity.
" D4 " " D1.	17,000 ohms.	Infinity.
" D7 and tag D8:- L.S. switched off. " " on.	 Varies between 0 and 130 ohms. -ditto-	 *Varies between 0 and 500 ohms. *Varies between 0 and 130 ohms.
Tag D8 and tag D9.	Zero.	Infinity.

? These resistance readings are dependent on the leakage current of the electrolytic smoothing condenser and are likely to vary considerably from the value stated. The reading may also change if the meter connections are reversed.

* When 'phone output control is rotated clockwise.

(Note tags 10, 11 and 12 are not used).

16/4/41.

POWER CHASSIS RESISTANCE VALUES (Cont'd).

TABLE VB - Tag Panel D and Valveholder V3A.

Test between.	RESISTANCE. External wiring in place and valves and vibrator in holders.	RESISTANCE. No external wiring and valves and vibrator removed.
Tag D1 and sockets 2, 7 and 8.	-	750 ohms smoothing choke resistance.
Tag D3 and sockets 3 & 5.	-	165 ohms transformer resistance.

TABLE VC - Tag Panel D and Vibrator-Holder.

Tag D2 and socket A on vibrator-holder.	-	80 ohms A.C/D.C. switch at A.C. 0.2 ohms A.C/D.C. switch at D.C.
Tag D3 and Vibrator Socket B.	-	80 ohms.
Tag D3 and Vibrator Socket C.	-	80 "
Tag D3 and Vibrator Socket D.	-	Zero.

TABLE VD - D.C. SUPPLY Socket.
(POWER Switch On).

Tag D2 and bottom pair of contacts. A.C/D.C.switch at A.C. " " " D.C.	Infinity. Very low.	Infinity. Very low.
Tag D3 and bottom pair of contacts. A.C/D.C.switch at A.C. " " " D.C.	Infinity. 2.5 ohms.	Infinity. 80 ohms.
Tag D3 and top pair of contacts.	Zero.	Zero.

POWER CHASSIS RESISTANCE VALUES (Cont'd).

TABLE VE - "MUTING & SIDETONE" Socket.

Test between.	RESISTANCE. External wiring in place and valves and vibrator in holders.	No external wiring and valves and vibrator removed.
Tag D3 and Sidetone (bottom) pin of the socket.		
Sidetone switch off.	Infinity.	Infinity.
" " on.	14 ohms.	Infinity.
Tag D3 and muting (top) pin of socket.	62,000 ohms.	Infinity.
Tag D1 and muting (top) pin of socket.	17,000 "	"
Tag D3 and common (thin) pin of socket.	Zero.	Zero.
Tag D4 and muting (top) pin of socket.	100 ohms.	100 ohms.
Tag D4 and Sidetone (bottom) pin of socket.		
Sidetone switch off.	Infinity.	Infinity.
" " on.	62,000 ohms.	"
Tag D5 and sidetone (bottom) pin socket.		
Sidetone switch off.	Infinity.	Infinity.
" " on.	Zero.	Zero.

TABLE VF - "A.C. SUPPLY " Socket.

Tag D3 and both A.C. SUPPLY pins. (POWER Switch on or off)	Infinity.	Infinity.
"A.C. SUPPLY " Socket between the two pins:-		
A.C/D.C. switch to D.C.	Infinity.	Infinity.
A.C./D.C. switch to A.C. but POWER switch off.	"	"
A.C./D.C.switch to A.C. but POWER switch on.	85 ohms.	85 ohms.
(Mains transformer primary adjusted for 230V).		

POWER CHASSIS RESISTANCE VALUES (Cont'd).

TABLE VG - Panel Jacks.

Test between.	RESISTANCE.	
	External wiring in place and valves and vibrator in holders.	No external wiring and valves and vibrator removed.
Tag D3 and sleeve contact of 'phone jacks.	Zero.	Zero.
Tag D3 and "tip" contact of 'phone jacks.	Varies between 0 and 130 ohms as 'phone vol. control is rotated clock-wise.	Infinity.
Tag D9 and 'phone jacks "tip" contact.	Zero.	Zero.
Tag D3 and "tip" contact of line jack.	28 ohms.	Infinity.
Tag D6 and "tip" contact of line jack.	Zero.	Zero.
Tag D3 and "sleeve" contact of line jack.	Zero.	Zero.

TABLE VI - Voltage Tests.

The following voltage readings should be obtained with either A.C. or D.C. SUPPLY and the "POWER ON/OFF" switch "ON".

Between	Readings.
Test point + and chassis.	250 Volts D.C.
Valveholder V3A.	
Socket 3 and chassis.	250 Volts A.C.
" 5 " "	" " "
" 2 " socket 7.	6 " "
Tags A2, B2, C2, D2, and A3, B3, C3, D3	12 " A.C. or D.C.
Tags A1, B1, C1, D1 and A3, B3, C3, D3.	250 " D.C.
Tags A7, B7 and A3, B3.	6 " A.C. or D.C.
MUTING & S/T socket (top pin) and chassis.	250 " D.C.

3. Receiver sensitivity tests.

If suitable apparatus is available the gain of succeeding stages may be measured. The figures obtained from these tests are given below, with a typical receiver as for work. All interconnecting wires should be in place; the A.V.C. switched on, the LIMITER and AUDIO FILTER switched off and the AUDIO and R.F. gain controls set at maximum unless otherwise stated. The I.F. switch should be in the "NARROW" position.

(a) 2nd A.F. stage.

With 3 volts R.M.S. of 400 c/s applied to the grid of the 2nd A.F. valve, an output of 50 milliwatts should be obtained; and with 6.2 volts R.M.S. applied to the grid, an output of 200 mW should be obtained.

(b) 1st A.F. stage.

With 0.5 volts R.M.S. of 400 c/s applied to the grid of the 1st A.F. valve, an output of 50 milliwatts should be obtained.

(c) 2nd I.F. stage.

With a signal input of 30 mV of I.F. which is modulated at 400 c/s to a depth of 30% applied to the grid of the 2nd I.F. valve, an output of 50 milliwatts should be obtained.

(d) 1st I.F. stage.

With a signal input of 1.5 mV of I.F. which is modulated at 400 c/s to a depth of 30% applied to the grid of the 1st I.F. valve, an output of 50 milliwatts should be obtained.

(e) F.C. stage.

With a signal input of 50 microvolts of I.F. which is modulated at 400 c/s to a depth of 30% applied to the grid of the F.C. valve, an output of 50 milliwatts should be obtained.

NOTE: For this I.F. sensitivity measurement the receiver is tuned to 3 M.c/s on range 3. The setting of the local oscillator affects the gain of the F.C. stage.

(f) Overall sensitivity.

The overall sensitivity of the receiver varies from 2 - 6μV on R.T. and is about 1μV on C.W., for a signal to noise ratio of 20 db. This is measured with an output level of 1mW.

(g) Beat frequency oscillator.

The B.F.O. should be at I.F. (465 K.c/s) when the dial is set with the indicator at the zero mark.

NOTE: For overall signal-frequency measurements, a signal-generator having a 10 ohms output impedance is connected via a 100 ohms resistance to the dipole aerial terminals. The extreme righthand terminal, being the earthy side, is connected to the earth terminal below it and to the earth terminal of the signal-generator. For all the I.F. measurements a 0.1μF condenser is used for coupling.

4. Location of faults.

(A) A.F. and preceding stages.

Although it is desirable to have suitable instruments for testing a faulty receiver, the defective stages of the receiver circuit may be often located quite simply by the following procedure:-

(a) Switch on receiver.

(b) The "AUDIO GAIN" and "R.F. GAIN" controls should be at maximum, the A.V.C. should be switched on and the "I.F." switch to "WIDE".

(c) Switch off the "LIMITER" and "AUDIO FILTER".

(d) Plug in the 'phones and while listening carefully:-

(i) Touch with a metal rod or moist finger the grid connector of the 2nd A.F. valve when a heavy "plonk" (and possibly A.C. mains hum, if these are near by) will be heard in the 'phones. If no sound or a weak sound is heard, this stage or the output circuit is faulty.

(ii) If this unit is in order proceed to check the 1st A.F. stage in a similar manner, when a louder "plonk" should be heard.

(iii) Similarly the I.F. units may be proved by touching the grid caps of the 2nd I.F., 1st I.F. and F.C. valves in turn when progressively louder "clicks" should be heard.

(iv) With an aerial connected, background noise should be heard on all ranges. If all ranges appear faulty, then it may be assumed that a fault exists in a part of the R.F. or local oscillator circuit which is common to all ranges.

(B) R.F. unit.

If the R.F. unit is shown to be faulty by the above tests, tests between the tags as given in Tables III should be made.

During this investigation, tests to see if the fault is common to all wave bands should be made.

Faults common to all ranges will probably be in the valve circuits and tests between + socket and sockets V1A, V1B and V2A (see Table II) on the valve test panel should reveal the faulty circuit.

(C) Special Note on Valve Faults.

The valve heaters in this receiver are wired in a series-parallel arrangement (see Diagram 1) i.e., four groups of two valves in series. Consequently failure of the heater circuit of one valve will affect the other and it should not be assumed that both valves are faulty.

(D) Inspection of Wiring and Coils etc.

Most of the internal wiring of the whole receiver can be inspected by tilting the receiver forward so that it stands on the handles of the front panel. The wavechange switch can be examined by removing the cover plate and screens which are secured by six screws to the switch-box.

Examination of the signal frequency and oscillator coils can be made by removing the covers of the four coil boxes, each of which is secured by four screws accessible from the top and bottom of the receiver. Before removing the three signal frequency coil boxes it is necessary to remove the end plate which is secured by screws to the base framework and front panel.

The R.F. oscillator valve V2A (see Plates II & III) is totally enclosed in a metal screening box. This screen is clamped by a knurled terminal head which will be found near the base of V1B. A screw is fitted in the muting relay cover and this can be removed for inspection purposes from the rear of the I.F. chassis.

(E) If an Avometer No.7, a Megger and a soldering iron are available the following table together with Section 2 "Test Figures" should be used in order to locate a simple fault on the receiver.

(E)

TABLE VII.

RECEIVER FAULTS.

Symptom.	Possible Fault.	Remedy.
(1) No signals.	(a) No L.T. volts on valves.	Check L.T.voltage at tags 2 and 3 on tag panels A, B, C and D. If there is no L.T. voltage check L.T. wiring in power chassis. Check contacts of A.C/ D.C. switch and adjust if necessary or replace switch.
	(b) No H.T. volts on valves.	Check H.T. voltage at test panel and between tags 1 and 3 on tag panels A, B, C and D. If there is no H.T. voltage at D1, check H.T. wiring in power chassis. Check A.C. potentials at rectifier valve-holder and power transformer tags. If the A.C.potentials at the rectifier valve-holder are correct the rectifier valve may be faulty or the electro-lytic smoothing condensers may have broken down.
	(c) No L.T. or H.T. volts on valves.	Check wiring of input sockets, POWER ON/OFF switch, A.C/D.C. switch and power transformer connections.
	(d) Valve loose in holder.	Push firmly "home" in holder.
	(e) Grid cap not in position on valve or broken flexible connection to grid.	Replace or test for continuity of flexible connector.

Symptom.	Possible Fault.	Remedy.
	(f) Faulty valve.	Replace. This can be checked by connecting an Avometer (voltmeter) across the requisite sockets of the test panel (see 2 "Test Figures" Table II).
	(g) Oscillator stage not oscillating. This can be checked by checking the anode current of the 3rd valve. Test between points + and V2A of the test panel with voltmeter. Observe whether the reading increases when the grid of the oscillator is shorted to chassis. Increase should be about 6 volts on Range I, and 1 volt on Ranges II and III. (100V. range on meter)	Replace valve. If a new valve does not give the requisite anode current as detailed in (g) then proceed to find internal fault in the R.F. unit by making use of 2 "Test Figures" Table III.
(2) No signals (H.T. and L.T. supplies in order. Valves passing correct currents according to test panel).	(a) Aerial trimmer shorting.	It is unlikely that this will occur over the whole swing of the trimmer but all ranges will suffer. Replace or repair.
	(b) Broken connection to tuning coil in either I.F. or R.F. amplifiers.	Examine wiring of stage affected.
	(c) Damaged tuning coil I.F. or R.F.	Circuit concerned will fail to trim or be very flat. Examine coil and replace or repair.

Symptom.	Possible Fault.	Remedy.
	(d) Output leads shorted or disconnected.	Check that the symptom is not common to the three output circuits, i.e. line-output, speaker and 'phones. If only one of these circuits is faulty test wiring as indicated in Section 2. If all three circuits give no output, check output transformer and wiring of output stage.
	(e) Muting relay stuck in send position.	This may be a mechanical fault of the armature or contacts, in which case repair or replace relay. OR an electrical fault in the circuit between relay and relay socket. Remove relay plug and measure potential between top pin and earth terminal. If this reads 250V. the fault is mechanical; if very low, a circuit fault has developed in the receiver.
	(f) Filter switch not making contact.	Clean or replace wafer.
(3) Weak Signals.	(a) Battery run down.	Check battery voltage and replace or recharge if necessary.
	(b) Primary tappings on mains transformer not adjusted correctly.	Check input voltage and adjust tappings accordingly.
	(c) Valve or valves require replacement.	Change if necessary. Test panel figures will give indication of valve deterioration.
	(d) Faulty output circuit.	See 2 (d).
	(e) Loose or broken lead to valve cap.	Repair lead.

Symptom.	Possible Fault.	Remedy.
	(f) Damaged I.F. Coil.	See 2(c).
	(g) R.F., L.F., or 'phone gain controls at minimum.	Turn all three controls fully clockwise and check that each functions normally.
	(h) Filter or I.F. bandwidth switches dirty or not contacting.	Clean contacts or replace wafers.
(4) No signals. Weak signals or "crackling" noise.	Aerial system defective.	Locate noise fault to aerial by checking that noise disappears when aerial terminal is shorted to earth terminal. Check aerial equipment.
(5) "Crackling" noise.	(a) Bad joint in receiver wiring or screened lead shorting.	Locate by shorting grids of valves to chassis in turn.
	(b) Tuning condenser shorting.	Locate as (a). Repair or replace.
	(c) Defects in wiring, sockets or switches of mains supply, or vehicle wiring.	Check that trouble is external by shorting aerial terminals.
	(d) Rubbing contacts of metallic objects near set.	As for (c).
(6) Distortion of strong signals.	A.V.C. not working.	Check whether H.T. currents of valves V1A, V1C and V1D decrease as receiver is tuned to a strong signal. If not, check wiring of tags A4 and B4, and measure resistances as indicated in test figures. If resistance values are correct the fault is in valve V2B or the A.V.C. feed condenser. Replace as necessary.

Symptom.	Possible Fault.	Remedy.
(7) No heterodyne or weak heterodyne.	(a) B.F.O. unit faulty.	Check H.T. to valve. Replace the valve if necessary. Test between appropriate tags (see Section 2 Test Figures, Tables IIIC and IIIF).
	(b) Valve V1D suppressor grid circuit faulty.	Try replacing valve. Check coupling coil of B.F.O. tuner and wiring of suppressor grid circuit.
	(c) B.F.O. completely off tune.	Adjust B.F.O. trimming condenser to 465 k.c/s with dial set with indicator at zero mark.
(8) Weak and/or "one-sided" Heterodyne.	(a) Heterodyne frequency not 465 k.c/s when indicator is at zero mark on "B.F.O." dial.	Adjust B.F.O. trimmer as for 7(c).
(9) Filter reduces output when switched into circuit.	(a) Heterodyne off tune	Adjust heterodyne to give 900 c/s beat note.
	(b) Dry joints or broken wiring of filter circuit.	Resolder and rewire where necessary.
	(c) Filter coil inductance faulty.	Replace filter box.
NOTE: The filter should not be dropped or roughly handled as this may alter the inductance and quality of one or more coils. This will affect the efficiency of the filter and the insertion loss will increase.		
	(d) Filter switch making poor contact.	Repair or replace.
(10) "Crash limiter" not working.	(a) Dry joints or broken wiring.	Resolder and rewire where necessary.
	(b) Rectifier damaged.	Replace.
(11) R.F. gain control noisy.	Slider making poor contact.	Replace control.
(12) A.F. gain		

5. Information for the guidance of R.A.O.C. workshops.

(A) Notes on Alignment of Circuits.

(1) I.F. Circuits.

All I.F. circuit trimming must be carried out with the bandwidth switch in the narrow position. Intermediate frequency is 465 k.c/s.

(2) Aerial Circuit.

Aerial circuit trimming should be carried out with the trimmer on the front panel set at about 5 (i.e. plates half out). The signal generator should be coupled to the dipole terminals through 100 ohm resistance (generator impedance assumed 10 ohms). The righthand terminal is earthy and should be connected to the earth terminal for measurements.

(3) Calibration.

If the pointer of the tuning scale or the coupling between the condenser and drive has been disturbed, it should be re-set as follows:-

(a) Immediately behind the front panel are two pillars carrying adjustable screws which act as end stops for the variable condenser drive. Slacken the lock nuts and screw the stops in towards the chassis.

(b) Swing the condenser until the vanes are fully meshed i.e. straight edges of moving vanes are exactly in line with the edges of the fixed vanes. The vanes may pass this position before reaching the stop in some condensers.

(c) Adjust righthand stop to meet the striker with the vanes as for (b).

(d) Now set pointer at 180 degrees on tuning scale and tighten clamping screw on pointer.

(e) Set lefthand stop so that the pointer does not pass the zero mark on the 180° scale.

(f) Tighten lock nuts on the two stops taking care that the screws do not rotate.

(4) Inductance trimmers.

Inductance trimmers in the form of copper discs are provided on the R.F. coils to take up small differences in wiring inductance. On no account should these trimmers be screwed right in as the circuit quality will be impaired. If a coil is replaced with one that is rather high in inductance, it should be reduced by spacing turns so that the coil trimmer always remains nearly right out.

(B) Dismantling Instructions.

The use of three separate chassis for the receiver assists greatly when major repairs are necessary.

(i) To remove the power chassis.

Take out the fixing screws of:-

"LS", "SIDETONE" and "POWER" switches and of the "MUTING & S/T" input socket. Remove "TEL. OUTPUT" dial.

Unsolder all the leads on tag panel D and also the speaker connections.

Tilt the receiver forward so that it stands on the handles of the front panel.

Remove the power chassis fixing screws at the bottom of the framework.

The power chassis can now be lifted from the receiver.

If it is necessary to obtain access to the wiring of the vibrator or rectifier valveholders, the following procedure is advised:-

(a) Remove all the connections from the top of the power transformer.

(b) Remove the four fixing screws of the power transformer supports at the sides of the chassis and withdraw the transformer from the bottom of the chassis. Most of the wiring will now be accessible.

WARNING: Many of the connections, particularly earth leads, in this chassis are intentionally short. Great care must therefore be taken to see that these leads and the position of components is not modified. This is important to maintain freedom from vibrator interference.

(ii) To remove the I.F. chassis.

Take out the fixing screws of:-

(a) Test Panel.
(b) Pilot Lamp Holder.
(c) "LIM." switch.

Remove the following knobs and dials:-

(a) "B.F.O." dial.
(b) "B.F.O." -"A.V.C." knob.
(c) "AUDIO GAIN" dial.
(d) "R.F. GAIN" "
(e) "AUDIO FILTER" knob.
(f) "I.F." knob.

Draw the test panel forward and turn it so that the face of it is downwards. Push it through the rectangular hole in the

panel and it will not then be necessary to unsolder the connections to it.

Unsolder all the connections to tag panels B and C at the rear of the set and also tag Y (see Diagram 3.).

Tilt the receiver forward so that it stands on the handles of the front panel.

Remove the I.F. chassis fixing screws at the bottom of the framework.

The I.F. chassis can now be lifted from the receiver.

(iii) To remove the R.F. chassis.

Remove the drive of the main tuning condenser.

Remove the dial of the "AERIAL TRIMMER" and the knob of the "RANGE" switch.

Disconnect the three aerial terminal leads.

Remove the two scale lamp holders from front panel.

Unsolder all the connections to tag panel A and tag Y (see Diagram 3.).

Tilt the receiver forward so that it stands on the handles of the front panel.

Remove the R.F. chassis fixing screws at the bottom of the framework.

The R.F. chassis can now be lifted from the receiver.

This chassis can be separated into a number of self-contained units as follows:-

(a) By unsoldering the leads to the four-gang condenser and undoing three fixing screws, the condenser and its baseplate can be removed from the chassis without disturbing the calibrated dial and its pointer.

(b) By unsoldering the leads connected to the switch-box and removing the screws fixing it to the chassis, the whole switchbox and coil assembly can be withdrawn.

(c) The individual coil boxes can be removed from the switchbox by unsoldering at the switch wafer and taking out the fixing screws.

(d) The range switch can be withdrawn from the side of the switchbox when the leads to the wafers have been unsoldered and the clamping nuts at the ends of the switchbox loosened.

(C)

TABLE VIII.

SPECIAL RECEIVER FAULTS.

Symptom.	Possible Fault.	Remedy.
(1) Weak signals at one end or part of tuning ranges.	(a) Tracking incorrect as a result of:-	
	(i) I.F. circuit off tune.	Trim I.F. stages to 465 k.c/s. Apply signal generator output via 0.1μF condenser between the F.C. grid (valve V1B) and chassis. Commence with the last I.F. circuit and trim each in turn.
	(ii) Ganging out on Range I. 17.5-7.0 m.c/s.	Set Range I capacity trimmers at 17.0 M.c/s and adjust inductance trimmers at 7.5 M.c/s. Reset capacity trimmers.
	(iii) Ganging out on Range II. 7.25-2.9 M.c/s.	Set Range II capacity trimmers at 7.0 M.c/s and adjust inductance trimmers at 3 M.c/s. Reset capacity trimmers.
	(iv) Ganging out on Range III. 3.0-1.2 M.c/s.	Set Range III capacity trimmers at 2.7 M.c/s and adjust inductance trimmers at 1.3 M.c/s. Reset capacity trimmers.
	(v) Padding Condenser "shorted".	If this occurs the calibration will be wrong. Inspect oscillator tuned circuit by removing cover of coil box as indicated in the dismantling instructions page 31.
	(vi) Gang Condenser may have been damaged.	Inspection may not show this as the condenser plates will probably be bent initially for matching. Replace condenser if other remedies fail.
16/4/41.		

Symptom.	Possible Fault.	Remedy.
(2) "Crackling noise, intermittent operation or variable results.	(a) Wave change, I.F. bandwidth, or filter switches dirty.	Locate by usual methods (page 30) and clean with a small brush moistened with carbon tetrachloride or similar cleaning liquid.
	(b) Wave change, bandwidth, or filter switch worn.	Replace.

16/4/41.

COMPONENT LISTS.

Reception Set R.107.

Condensers.

	Position in Circuit.	Maker.	Capacitance.	Type, Rating and Remarks.
C13C	R.F.Amplifier Grid Condenser	Philips.	200pF	4905532 Ceramic Tube.
C2A	Aerial Trimmer.	Wingrove & Rogers.	50pF	Polar C.1801-50.
C3A	R.F.Amplifier Grid Circuit Trimming. Range I.	"	25pF	Polar C.803-25.
C3B	" " " " II.	"	"	" "
C3C	" " " " III.	"	"	" "
C3D	" Plate Circuit Trimming. Range I.	"	"	" "
C3E	" " " " II.	"	"	" "
C3F	" " " " III.	"	"	" "
C3G	Frequency Changer Grid Circuit Trimming. Range I.	"	"	" "
C3H	" " " " II.	"	"	" "
C3I	" " " " III.	"	"	" "
C3J	R.F.Oscillator Trimming Range I.	"	"	" "
C3K	" " " II.	"	"	" "
C3L	" " " III.	"	"	" "
C4A	Main Tuning Condenser.	"	300pF per Section.	
C5M	R.F.Amplifier A.V.C.Line Decoupling.	T.C.C.	.05µF	Type TFX paper in porcelain tube.
C5A	R.F.Amplifier Cathode.	"	"	" " "
C5B	R.F.Amplifier Screen Grid Decoupling	"	"	" " "
C13D	F.C.Suppressor Grid Coupling.	Philips	200pF	4905532 Ceramic.

20/6/41.

Reception Set R.107.
Condensers (Cont'd).

	Position in Circuit.	Maker.	Capacitance.	Type, Rating and Remarks.
C.5C.	R.F.Amplifier (VIA) Plate Circuit Decoupling.	T.C.C.	.05µF	Type TFX paper in porcelain tube.
C.5D.	Frequency Changer (VIB). Grid Circuit Decoupling.	"	"	-ditto-
C.5E.	Frequency Changer (VIB). Cathode.	"	"	-ditto-
C.5F.	Frequency Changer (VIB). Screen Grid Decoupling.	"	"	-ditto-
C.6A.	R.F.Oscillator (V2A) Grid.	Philips.	80pF	4905527. Ceramic Tube.
C.10A.	R.F.Oscillator (V2A) Plate.	Hunt.	.01µF	ZA.1422. MLW. Mica.
C.7A.	R.F.Oscillator Padder. Range I.	Hunt.	5000pF 5%	SMLW. Silvered Mica.
C.8A.	" " " " II.	"	1630pF 2%	SMLW. Silvered Mica.
C.9A.	" " " " III.	"	750pF 2%	SMPW. Silvered Mica.
C.1A.	Aerial Series Condenser.	Philips.	20pF	4905524. Ceramic Tube.
C.25A.	R.F.Amplifier (VIA) Plate Circuit. Range I.	"	10pF	4905516. Ceramic Tube.
C.25B.	Frequency Changer (VIB) Grid Circuit. Range I.	"	10pF	4905516. Ceramic Tube.
C.5G.	I.F.Bandwidth Control TIA.	T.C.C.	.05µF	Type TFX paper in porcelain tube.
C.5H.	" " " "	"	"	- ditto -
C.5I.	" " " TIB.	"	"	- ditto -
C.5J.	" " " "	"	"	- ditto -
C.5K.	" " " TIC.	"	"	- ditto -
C.5L.	" " " "	"	"	- ditto -
C.11A.	Frequency Changer (VIB) Plate Decoupling.	"	.1µF	- ditto -
C.11B.	1st I.F. Stage (VIC) A.V.C. Decoupling.	"	"	- ditto -
C.11C.	1st I.F. Stage (VIC) Cathode.	"	"	- ditto -

16/4/41

	Position in Circuit.	Maker.	Capacitance.	Type, Rating and Remarks.
C.11D.	1st I.F. Stage (VIC) Screen Grid Decoupling.	T.C.C.	.1µF	Type TFX paper in porcelain tube.
C.11E.	1st I.F. Stage (VIC) Plate Decoupling.	"	"	- ditto -
C.11F.	2nd I.F. Stage (VID) A.V.C.Decoupling	"	"	- ditto -
C.11G.	2nd I.F.Stage (VID) Cathode Decoupling	"	"	- ditto -
C.11H.	2nd I.F.Stage (VID) Screen Grid Decoupling.	"	"	- ditto -
C.11I.	2nd I.F.Stage (VID) Plate Decoupling.	"	"	Type TFX paper in porcelain tube. 350V.
C.11J.	1st A.F.Stage (V2B) Cathode Decoupling	"	"	- ditto -
C.11K.	A.V.C. Line Decoupling.	"	"	- ditto -
C.11L.	B.F.O. (V2A') Plate.	"	"	- ditto -
C.12A.	Coupling between TIB and TIC.	Philips	2.2pF	Stone 4905561.
C.10B.	1st A.F.Stage (V2B) Grid Coupling.	Hunt.	.01µF	MLW. Mica. ZA.1422.
C.13A.	I.F.Bypass, Grid Circuit (V2B).	Philips.	200pF	4905532. Ceramic Tube.
C.13B.	I.F.Bypass, Grid Circuit (V2B).	Philips.	200pF	4905532. Ceramic Tube.
C.14A.	A.V.C.Diode (V2B) Coupling.	Philips.	100pF	4905528. Ceramic Tube.
C.10C.	2nd A.F.(V2B') Grid Coupling.	Hunt.	.01µF	MLW. Mica. ZA.1422.
C.14B.	B.F.O.(V2A') Grid Coupling.	Philips.	100pF	4905528. Ceramic tube.
C.2B.	B.F.O. Tuning.	Wingrove & Rogers.	50pF	Polar C.1801-50.
C.16A.	B.F.O.Trimming.	"	100pF	Polar C.803-100.

16/4/41.

	Position in Circuit.	Maker.	Capacitance.	Type, Rating and Remarks.
C.17A.	B.F.O. Shunt Tuning.	Hunt.	1000pF 2%	SMLW Silvered Mica. R1Q.
C.6B.	Top of B.F.O. Tuning Condenser.	Philips.	80pF	Ceramic Tube. 4905527.
C.18A.	Plate Supply Smoothing.	Hunt.	8-8μF	ZA.1729. Type 3857K. Electrolytic.
C.10D.	Vibrator R.F. Filter.	Hunt.	.01μF	MLW Mica. ZA.1422.
C.10E.	" " "	Hunt.	.01μF	MLW Mica. ZA.1422.
C.10F.	D.C. Input Filter.	Hunt.	.01μF	MLW Mica. ZA.1422.
C.20A.	Vibrator Buffer Condenser (Power Transformer H.T.Sec.)	T.C.C.	.01μF	Mica Type M4. 2200 V. Test.
C.21A.	D.C.Input Filter.	T.M.C.	1μF	Type 21129 Paper.
C.21B.	D.C.Input Filter.	T.M.C.	1μF	Type 21129 Paper.
C.21C.	L.T. R.F. Filter.	T.M.C.	1μF	Type 21129 Paper.
C.22A.	Muting Relay Circuit.	Hunt.	4μF	Type 8563 Paper. 400V. 4L.
C.23A.	Mains Input Filter.	Dubilier.	.001μF	Type 690W. Mica. R1E.
C.23B.	Mains Input Filter.	Dubilier.	.001μF	Type 690W. Mica. R1E.

16/4/41.

Reception Set R.107.
Resistors.

	Position in Circuit.	Maker.	Resistance.	Type, Rating and Remarks.
R.2A.	R.F. Amplifier (VIA) Grid Leak.	Erie.	.25MΩ	½ watt insulated.
R.3A.	R.F. Amplifier (VIA) Cathode.	"	300 Ω	" "
R.18A	R.F. Amplifier (VIA) Screen Grid Voltage Divider. Top.	"	25,000 Ω	1 " "
R.5A.	R.F. Amplifier (VIA) Plate Decoupling.	"	5,000 Ω	½ " "
R.6A.	R.F. Amplifier (VIA) Test Resistance	"	3,000 Ω	" "
R.7A.	Frequency Changer (VIB) Cathode.	"	400 Ω	" "
R.5B.	" " " "	"	5,000 Ω	" "
R.8A.	" " " Screen Grid.	"	80,000 Ω	" "
R.9A.	R.F.Oscillator (V2A) Grid Leak.	"	50,000 Ω	" "
R.8B.	" " " Plate.	"	80,000 Ω	" "
R.4B.	" " " "	"	25,000 Ω	" "
R.6B.	" " " Test Resistance	"	3,000 Ω	" "
R.10A.	R.F.Amplifier (VIA) Screen Grid Voltage Divider. Bottom.	"	20,000 Ω	" "
R.16A.	Muting Relay Coil Feed.	"	15,000 Ω	3 watt.
R.6I.	B.F.O. (V2A') Test Resistance.	"	3,000 Ω	½ watt insulated.
R.4C.	Frequency Changer (VIB) Plate Decoupling.	"	25,000 Ω	" "
R.6D.	Frequency Changer (VIB) Test Resistance.	"	3,000 Ω	" "
R.2B.	1st I.F.Stage (VIC) A.V.C.Decoupling	"	.25MΩ	" "
R.17A.	1st I.F.Stage (VIC) Cathode.	"	500 Ω	" "
R.11A.	1st I.F.Stage (VIC) Screen Grid.	"	.1MΩ	" "
R.5C.	1st I.F.Stage (VIC) Plate Circuit Decoupling.	"	5,000 Ω	" "
R.6E.	1st I.F.Stage (VIC) Test Resistance.	"	3,000 Ω	" "
R.2C.	2nd I.F.Stage (VID) A.V.C.Decoupling	"	.25MΩ	" "
R.17B.	2nd I.F.Stage (VID) Cathode.	"	500 Ω	" "
R.11B.	2nd I.F.Stage (VID) Screen Grid.	"	.1MΩ	" "
R.5D.	2nd I.F.Stage (VID) Plate Circuit Decoupling.	"	5,000 Ω	" "
R.6F.	2nd I.F.Stage (VID) Test Resistance.	"	3,000 Ω	" "

16/4/41.

	Position in Circuit.	Maker.	Resistance.	Type, Rating and Remarks.
R.2D.	I.F.Filter, Grid Circuit (V2B).	Erie.	.25MΩ	½ watt insulated.
R.12A.	2nd Detector Diode Load (V2B).	"	.5MΩ	" "
R.13A.	1st A.F. Stage (V2B) Cathode.	"	1,000 Ω	" "
R.12B.	A.V.C. Diode Load (V2B).	"	.5MΩ	" "
R.2E.	A.V.C. Filter.	"	.25MΩ	" "
R.10B.	1st A.F.Stage (V2B) Plate.	"	20,000 Ω	" "
R.6G.	1st A.F.Stage (V2B) Test Resistance.	"	3,000 Ω	" "
R.11C.	2nd A.F.Stage (V2B') Grid Leak.	"	.1MΩ	" "
R.17C.	2nd A.F.Stage (V2B') Cathode.	"	500 Ω	" "
R.6H.	2nd A.F.Stage (V2B') Test Resistance.	"	3,000 Ω	" "
R.1A.	Lamp, Operators Voltage Dropper.	"	100 Ω	" "
R.1B.	Lamp, Indicating Voltage Dropper.	"	100 Ω	" "
R.9B.	B.F.O. (V2A') Grid Leak.	"	50,000 Ω	" "
R.15A.	B.F.O. (V2A') Plate Circuit.	"	30,000 Ω	" "
R.1C.	Muting Circuit.	"	100 Ω	" "
R.14A.	Vibrator Circuit.	"	150 Ω	" "
R.14B.	Vibrator Circuit.	"	150 Ω	" "
R.9C.	F.C.Suppressor Grid Leak.	"	50,000 Ω	" "
VR.1A.	Reverse Log Taper.	Haynes Radio.	4,000 Ω	
VR.2A.	Reverse Log Taper.	Morganite Stackpole	.5MΩ	MNAR 50410 30616
VR.3A.	Volume Control.	"	500 Ω	MNAR 50140 30616

16/4/41

Reception Set R.107.
Inductors.

	Position in Circuit.	Maker.	Inductance.	Type, Rating and Remarks.
L.1A.	R.F.Amplifier Grid Circuit Range I.	R.T.E.	1.6 µH	
L.2A.	- ditto - " II.	"	10.2 µH	
L.3A.	- ditto - " III.	"	60.4 µH	
L.4A.	R.F.Amplifier Plate Circuit Range I.	"	1.6 µH	
L.5A.	- ditto - " II.	"	10.2 µH	
L.6A.	- ditto - " III.	"	60.4 µH	
L.4B.	Frequency Changer Grid Circuit Range I.	"	1.6 µH	
L.5B.	- ditto - " II.	"	10.2 µH	
L.6B.	- ditto - " III.	"	60.4 µH	
L.7A.	R.F. Oscillator. Range I.	"	1.5 µH	
L.8A.	- ditto - " II.	"	8.4 µH	
L.9A.	- ditto - " III.	"	40.5 µH	
L.10A.	B.F.O.	"	112 µH	
L.14A.	Mains Input R.F. Filter.	"	700µH/Section	
L.15A.	D.C. Input R.F. Filter.	"	100 µH	
L.15B.	L.T. + Connection to Vibrator Socket.	"	100 µH	
L.15C.	L.T. + R.F. Filter.	"	100 µH	
L.16A.	H.T. Smoothing Choke.	Savage	50mA 20 H.	Type C.C.37 S.S.E. 26180
L.17A.	H.T. Feed.	Stratton	1.5mH	Eddystone 1022.
L.18A	R.F.Oscillator Heater Lead.	R.T.E.	730 µH	

16/4/41.

	Position in Circuit.	Maker.	Type, Rating and Remarks.
S.1A.	Waveband Switching.	Oak.	6 Wafers.
S.2A.	I.F.Bandwidth Control.	Oak.	3 Wafers.
S.3A.	A.V.C. & B.F.O. Switching.	Oak.	1 Wafer.
S.4A.	Audio Filter Switching.	Oak.	1 Wafer.
S.5A.	Output Crash Limiter.	Arrow.	8102 C.W.
S.5B.	Sidetone Switching.	Arrow.	8102 C.W.
S.5C.	Loudspeaker On/Off.	Arrow.	8102 C.W.
S.6A.	Mains On/Off.	Arrow.	8102 D.
S.7A.	A.C/D.C. Switching.	Burne Jones.	Magnum 5 pole change-over.
ansformers.			
T.1A.	Frequency Changer to 1st I.F. Grid (VIC)	R.T.E.	
T.1B.	1st I.F. Stage (VIC) Plate.	R.T.E.	
T.1C.	2nd I.F. Stage (VID) Grid.	R.T.E.	
T.1D.	2nd I.F. Stage (VID) Plate.	R.T.E.	
T.2A.	Output Transformer.	Haynes Radio	
T.3A.	Power Transformer.	Wright & Weaire.	
scellaneous.			
W.1A.	Crash Limiter Rectifier.	Westinghouse	Type M.3. 4/1/1B.
J.1A.	Line Jack.		P.No.19211.
J.2A.	Telephone Jack.	E.K.Cole.	ZA.4390.
REL.1A.	Relay (break in).	S.T.C.	I M and 1 CO.
LS.1A.	Loudspeaker.	Goodmans Industries.	Type D/301/42.
F.1A.	Slydlok Fuseholder.	Edward Wilcox	Type 15335.
AF.1A.	Audio Filter Unit.	R.T.E.	
	Vibrator, 12V. Non-synchronous.		Type G.650.

16/4/41

Reception Set R.107.
Valves.

Code No.	Position in Circuit.	Army Type.	Maker's Type
V1A	R.F. Amplifier.	A.R.P.34	EF.39
V1B	Frequency-changer.	"	"
V1C	1st I.F. Amplifier.	"	"
V1D	2nd I.F. "	"	"
V2A	Heterodyne Oscillator.	A.R.21.	EBC.33.
V2A'	Beat Oscillator for C.W.	"	"
V2B	1st A.F. Amplifier.	"	"
V2B'	2nd A.F. "	"	"
V3A	Rectifier.		6X5G.

16/4/41.

CODING FOR CONDENSERS AND RESISTANCES.

RESISTANCES.

R1A to C	100 Ω	½ W
R2A to E	250,000 Ω	"
R3A	300 Ω	"
R4B & C	25,000 Ω	"
R5A to D	5,000 Ω	"
R6A & B. C to I	3,000 Ω	"
R7A	400 Ω	"
R8A & B	80,000 Ω	"
R9A to C	50,000 Ω	"
R10A & B	20,000 Ω	"
R11A to C	100,000 Ω	"
R12A to B	500,000 Ω	"
R13A	1,000 Ω	"
R14A & B	150 Ω	"
R15A	30,000 Ω	"
R16A	15,000 Ω	3 W
R17A to C	500 Ω	½ W
R18A	25,000 Ω	1 W
VR1A	4,000 Ω	½ W
VR2A	500,000 Ω	"
VR3A	500 Ω	"

C1A	20 pF
C2A & B Variable	50 pF
C3A to L "	25 pF
C4A "	4 × 300 pF
C5A to M	50,000 pF
C6A & B	80 pF
C7A	5,000 pF
C8A	1,630 pF
C9A	750 pF
C10A to F	10,000 pF
C11A to M	0.1 μF
C12A	2.2 pF
C13A to D	200 pF
C14A & B	100 pF
C15A & B	5,000 pF
C16A Variable	100 pF
C17A	1,000 pF
C18A	8-8 μF
C20A	10,000 pF
C21A to C	1 μF
C22A	4 μF
C23A & B	1,000 pF
C25A & B	10 pF

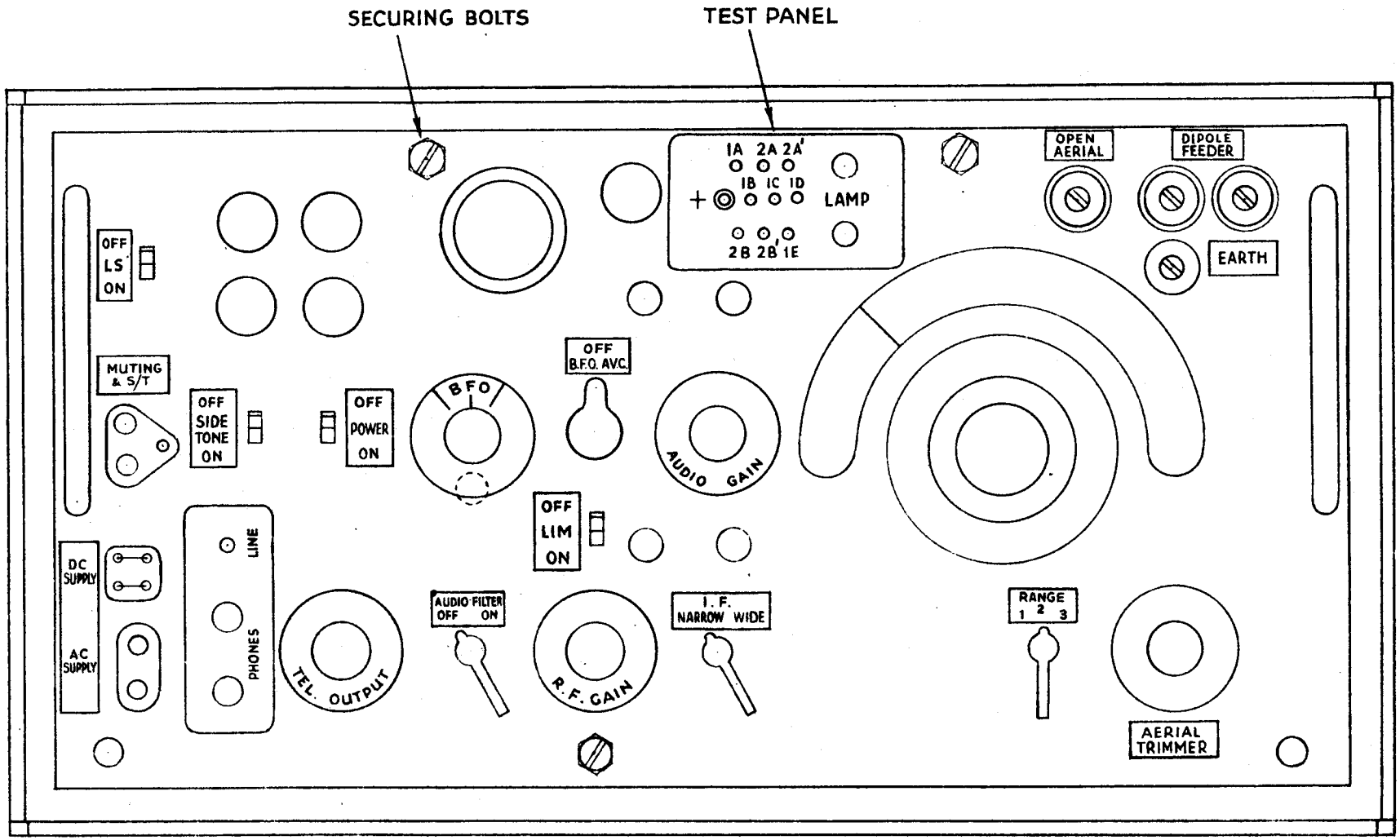

DIAGRAM 2

RECEPTION SET R.107.

FRONT VIEW.

1/5/41

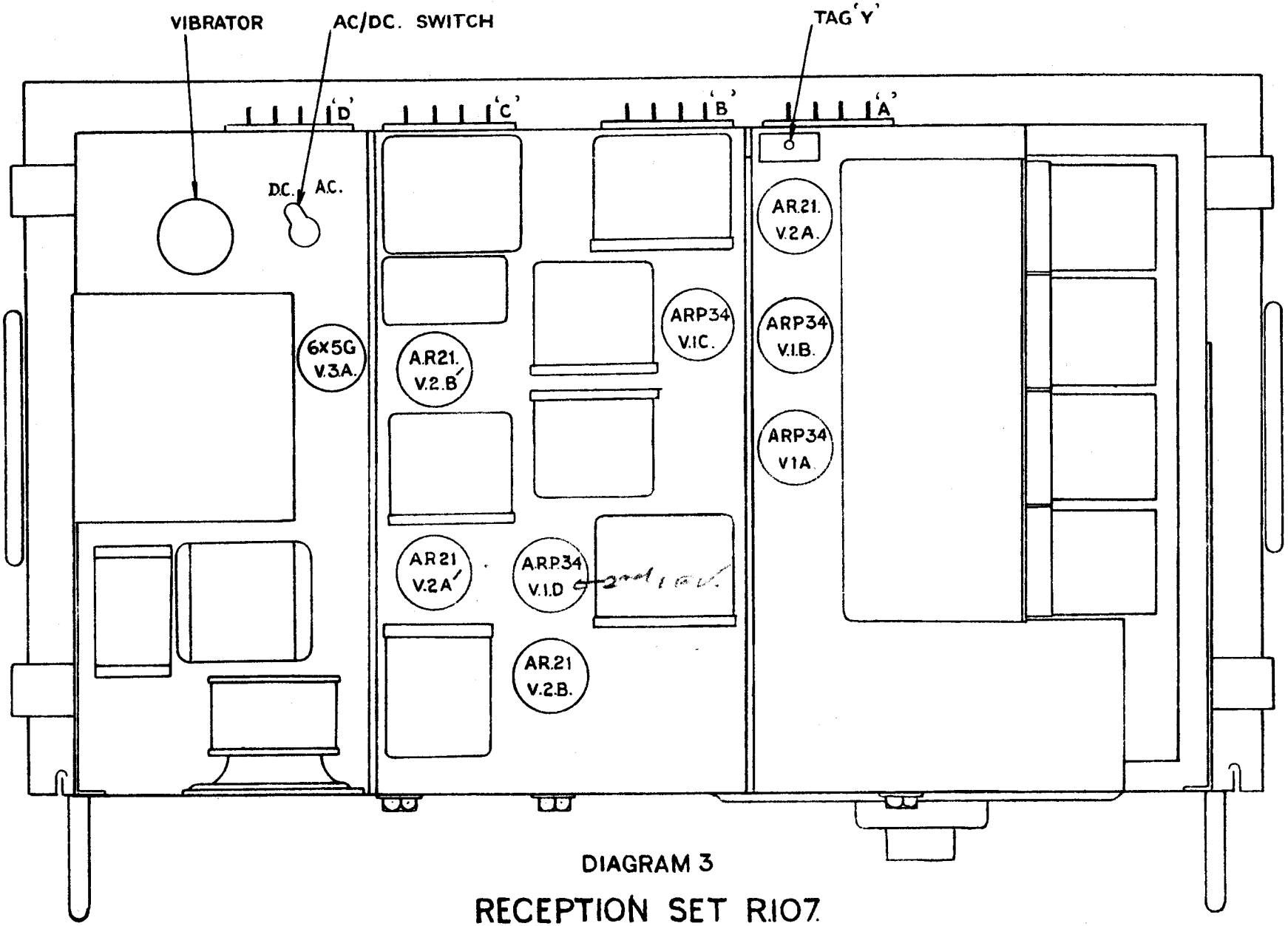

DIAGRAM 3

RECEPTION SET R.107.
PLAN VIEW OF INTERIOR.

1/5/41.

RECEPTION SETS R.107. CIRCU

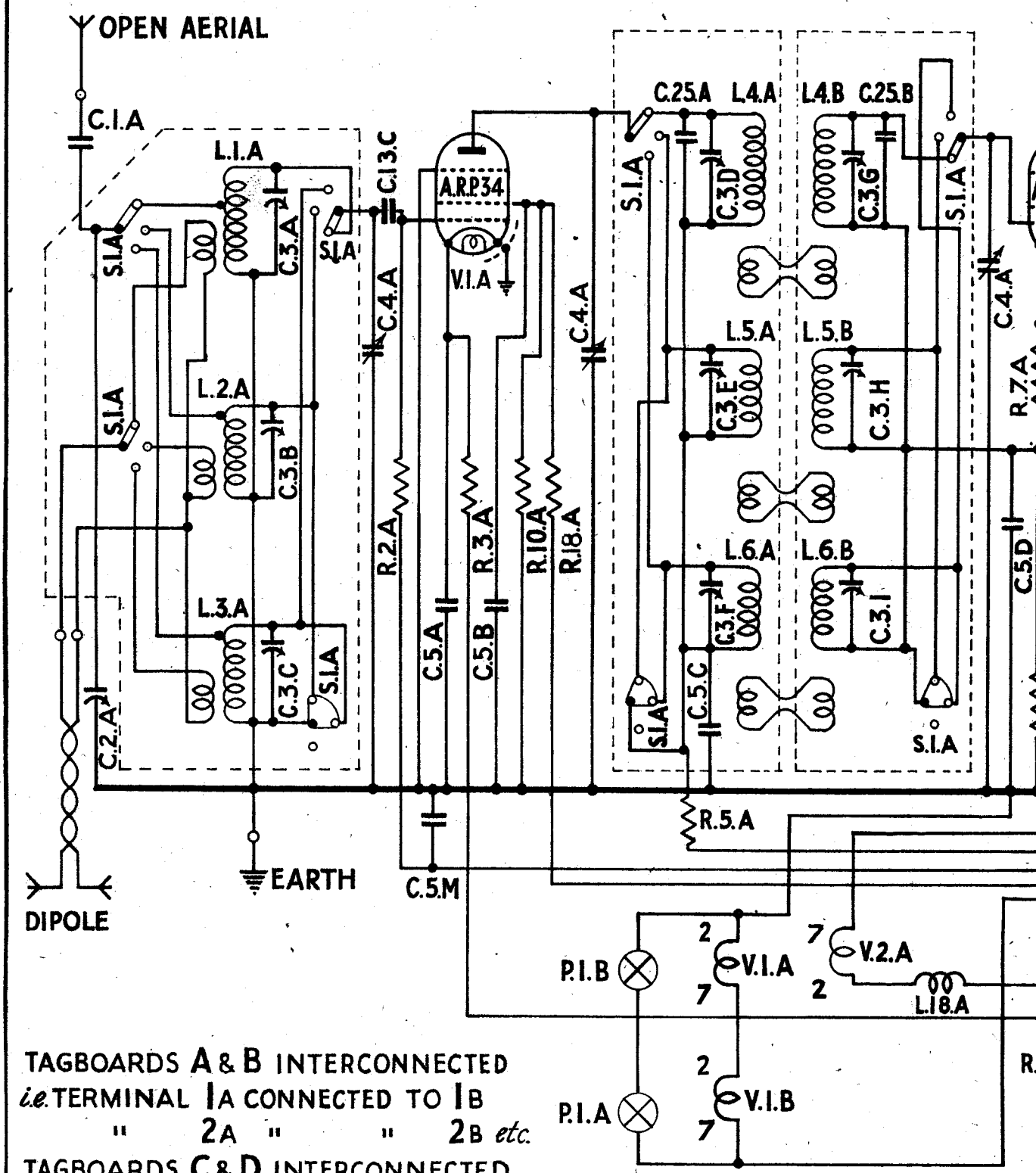

TAGBOARDS A & B INTERCONNECTED
i.e. TERMINAL 1A CONNECTED TO 1B
" 2A " " 2B *etc.*
TAGBOARDS C & D INTERCONNECTED
i.e. TERMINAL 1C CONNECTED TO 1D
" 2C " " 2D *etc.*

TAG Y IS CONNECTED TO LEAD X

NOTE: T
VALVE TE

20/6/41.

R.F. UNIT

CIRCUIT DIAGRAM

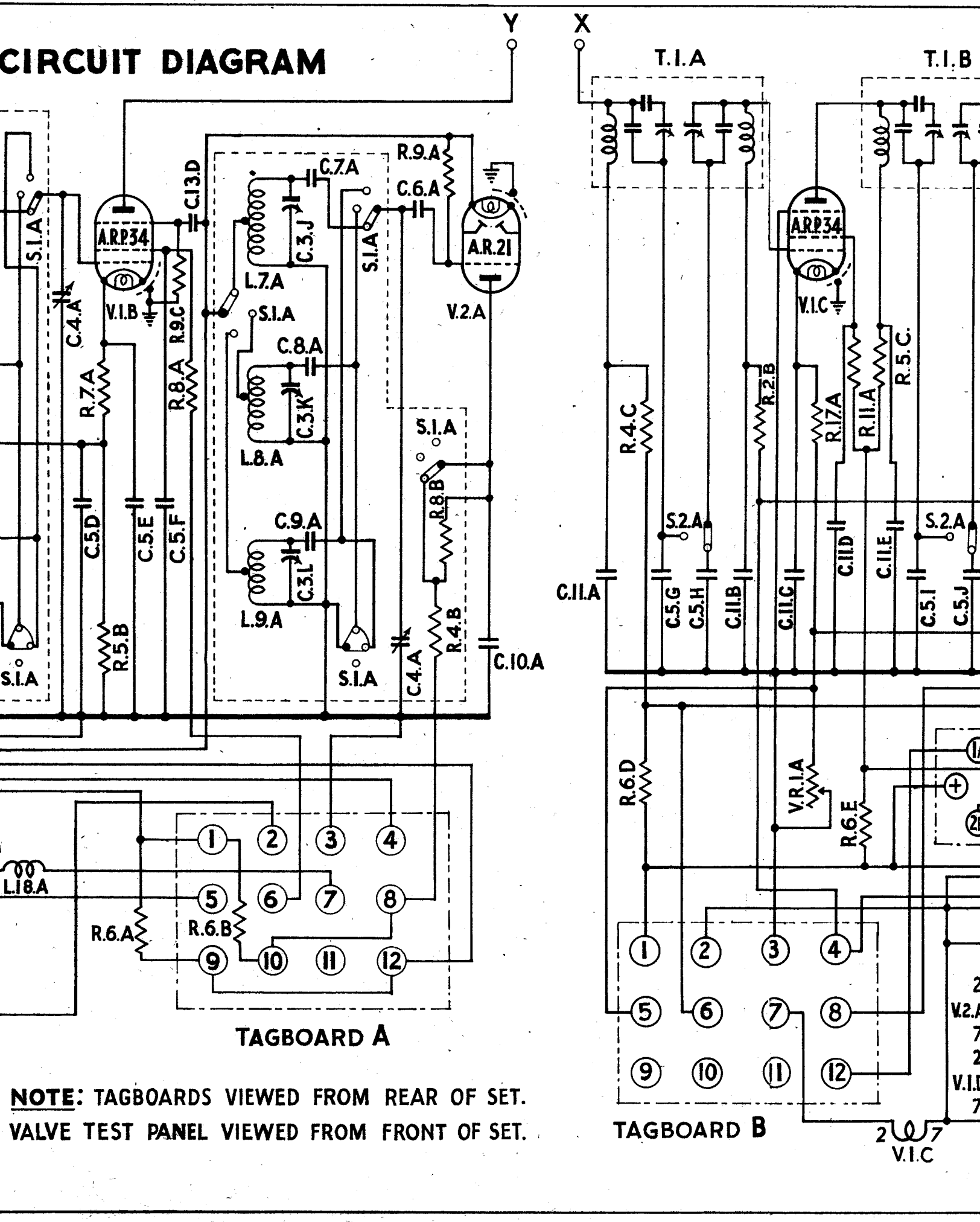

NOTE: TAGBOARDS VIEWED FROM REAR OF SET.
VALVE TEST PANEL VIEWED FROM FRONT OF SET.

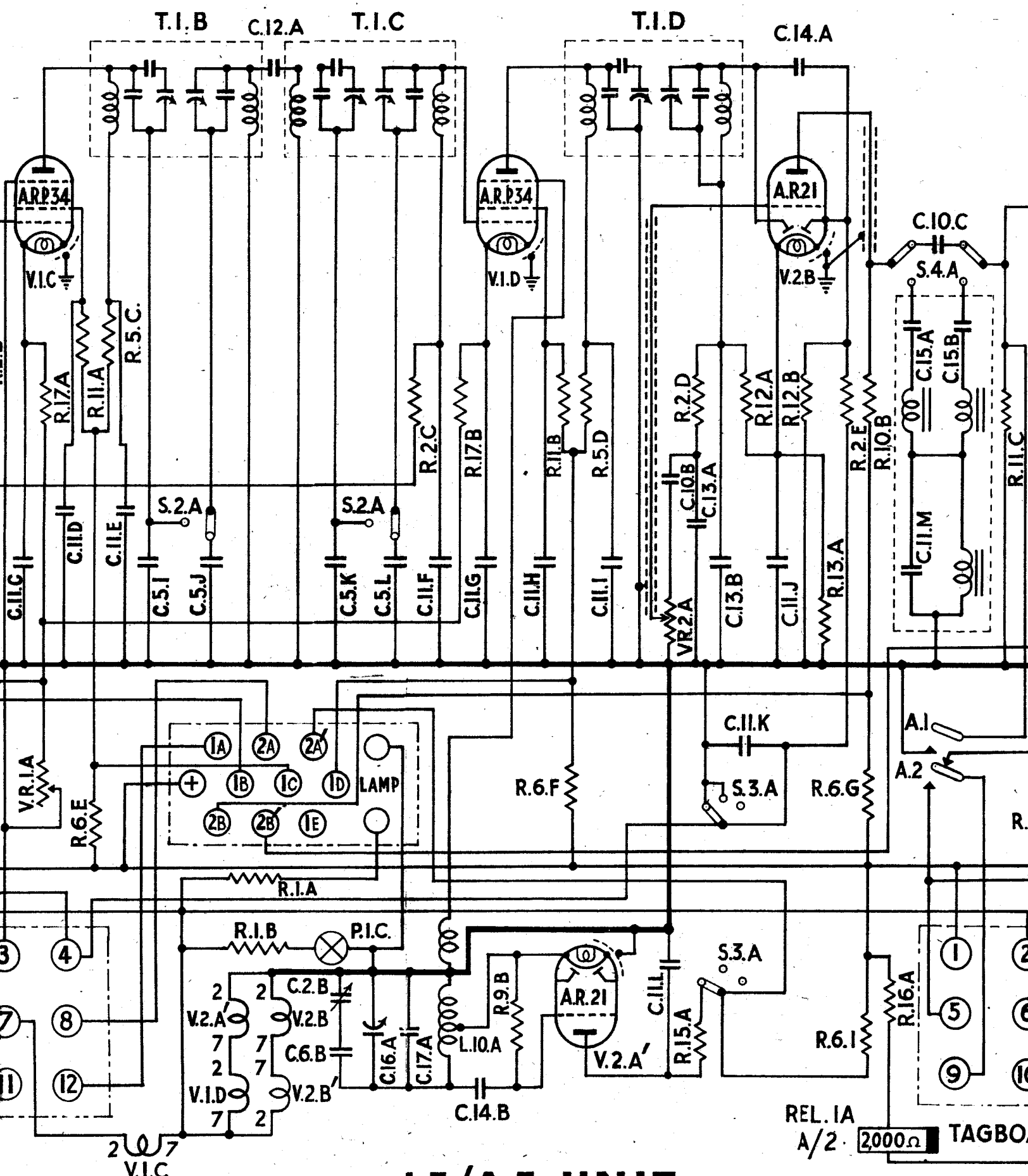
T.I.B
C.12.A
T.I.C
T.I.D
C.14.A
A.R.P.34
A.R.P.34
A.R.21
V.I.C
V.I.D
V.2.B
C.10.C
S.4.A
R.17.A
R.11.A
R.5.C.
R.2.C
R.17.B
R.11.B
R.5.D
R.2.D
R.12.A
R.12.B
R.2.E
R.10.B
C.15.A
C.15.B
R.11.C
C.11.C
C.11.D
C.11.E
S.2.A
S.2.A
C.5.I
C.5.J
C.5.K
C.5.L
C.11.F
C.11.G
C.11.H
C.11.I
C.10.B
C.13.A
VR.2.A
C.13.B
C.11.J
R.13.A
C.11.M
C.11.K
A.1
A.2
S.3.A
R.6.G
R.6.F
V.R.1.A
R.6.E
LAMP
R.1.A
R.1.B
P.I.C.
C.2.B
V.2.A'
V.2.B
C.6.B
V.1.D
V.2.B'
C.16.A
C.17.A
L.10.A
R.9.B
A.R.21
V.2.A'
C.11.L
R.15.A
S.3.A
R.6.1
R.16.A
C.14.B
REL. 1A
A/2
2000Ω
TAGBO
V.1.C

I.F./A.F. UNIT

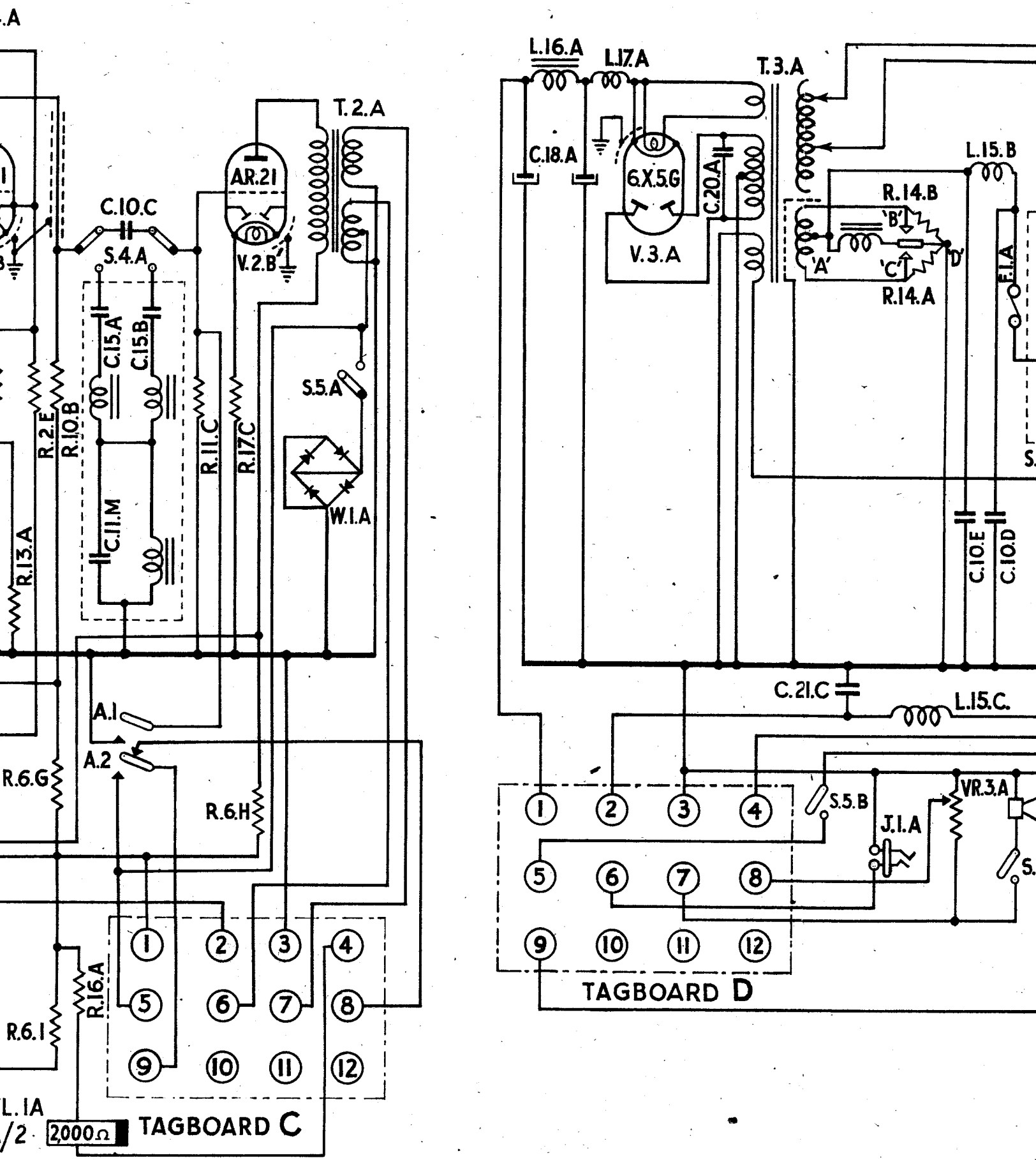
T.2.A
AR.21
C.10.C
S.4.A
V.2.B
C.15.A
C.15.B
C.11.M
R.2.E
R.10.B
R.11.C
R.17.C
S.5.A
W.1.A
R.13.A
A.1
A.2
R.6.G
R.6.H
R.16.A
R.6.1
L.1A
2,000Ω
TAGBOARD C
L.16.A
L.17.A
T.3.A
C.18.A
6.X.5.G
C.20.A
V.3.A
L.15.B
R.14.B
'B'
'A'
'C'
'D'
R.14.A
F.1.A
C.10.E
C.10.D
C.21.C
L.15.C.
S.5.B
VR.3.A
J.1.A
TAGBOARD D

POWER UN

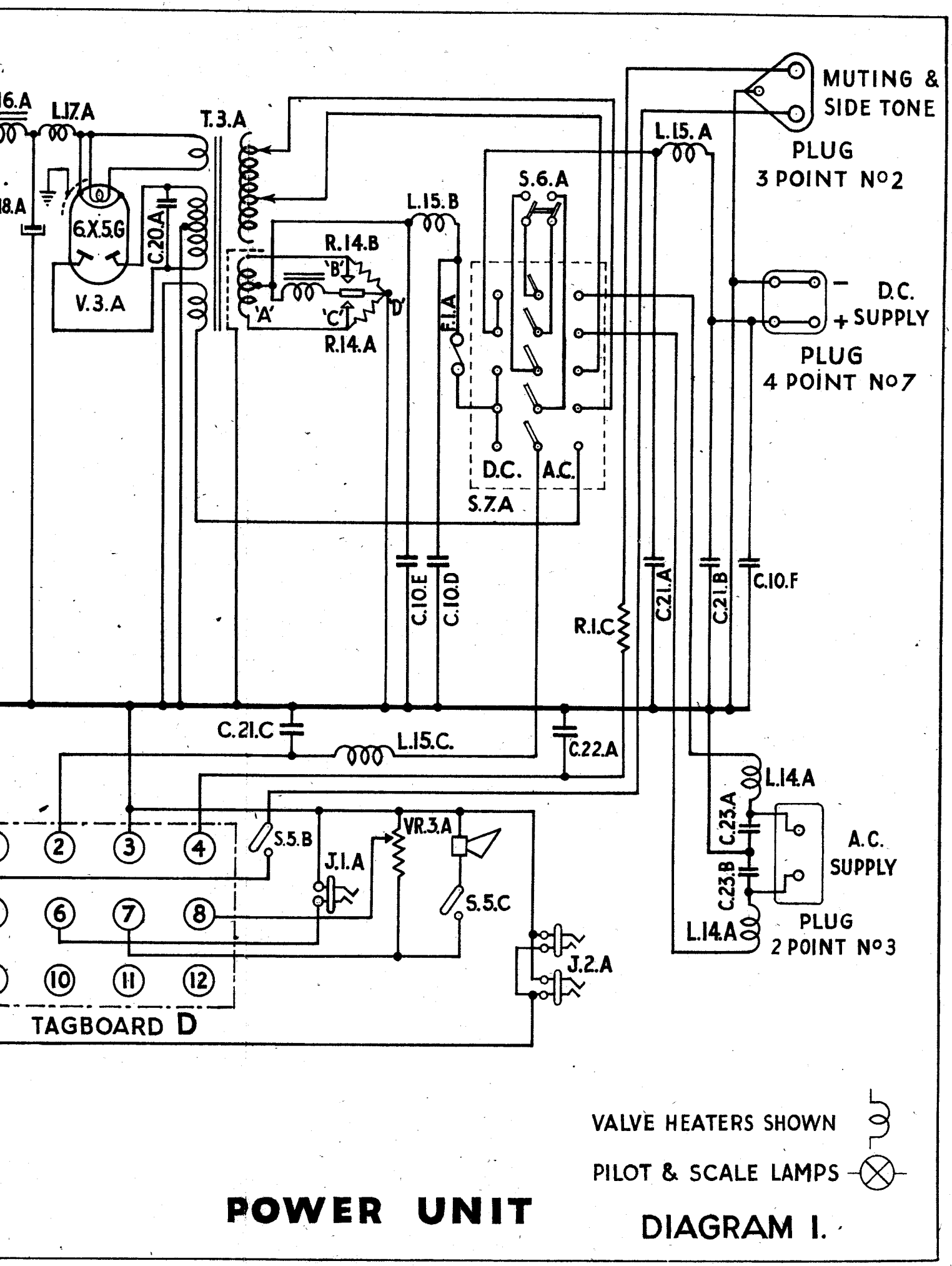

POWER UNIT

DIAGRAM I.

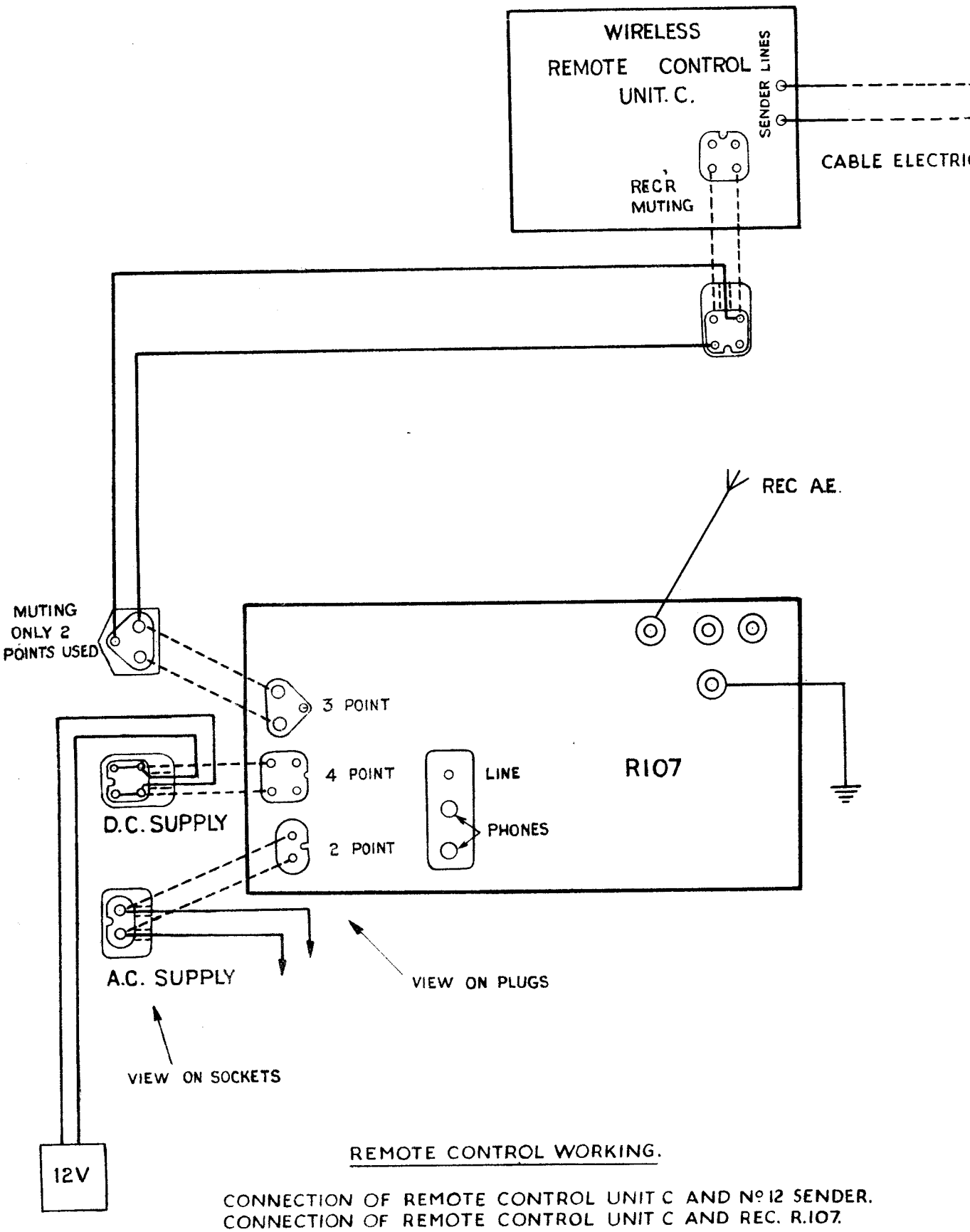

REMOTE CONTROL WORKING.

CONNECTION OF REMOTE CONTROL UNIT C AND Nº 12 SENDER.
CONNECTION OF REMOTE CONTROL UNIT C AND REC. R.107.

DIAGRAM 4.

1/5/41.

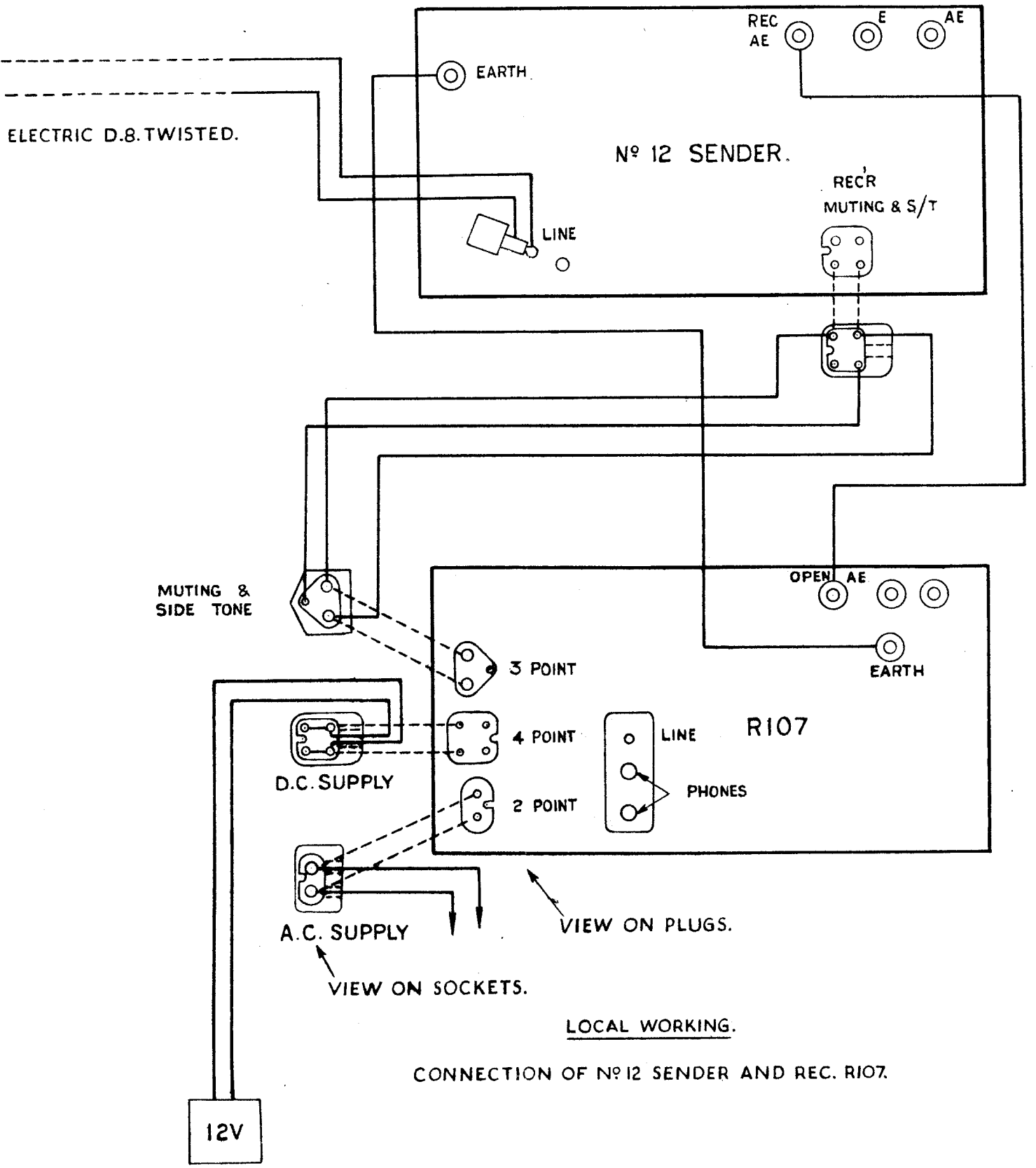

LOCAL WORKING.

CONNECTION OF Nº 12 SENDER AND REC. R107.

DIAGRAM 4.

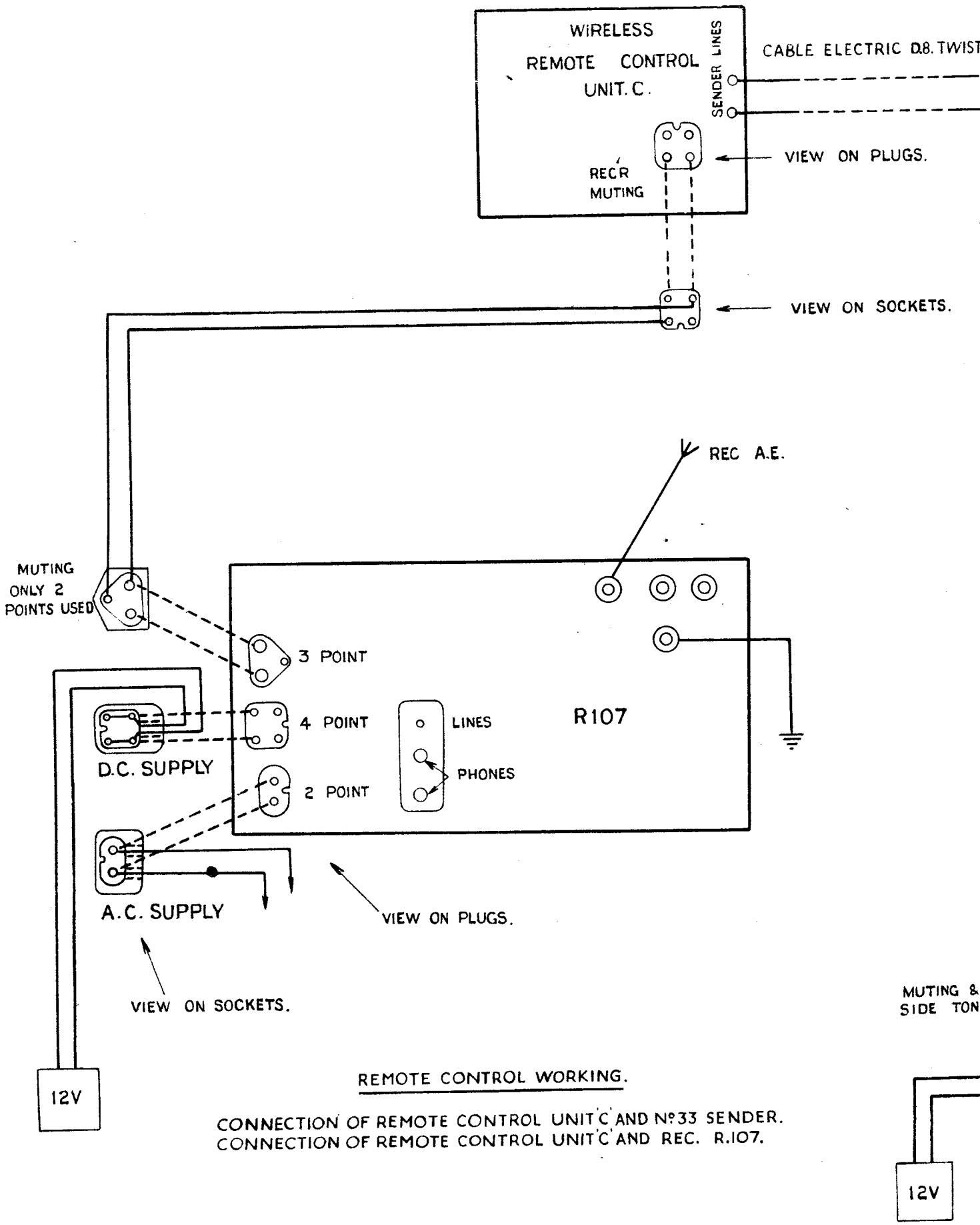

REMOTE CONTROL WORKING.

CONNECTION OF REMOTE CONTROL UNIT 'C' AND Nº33 SENDER.
CONNECTION OF REMOTE CONTROL UNIT 'C' AND REC. R.107.

DIAGRAM 5.

1/5/41.

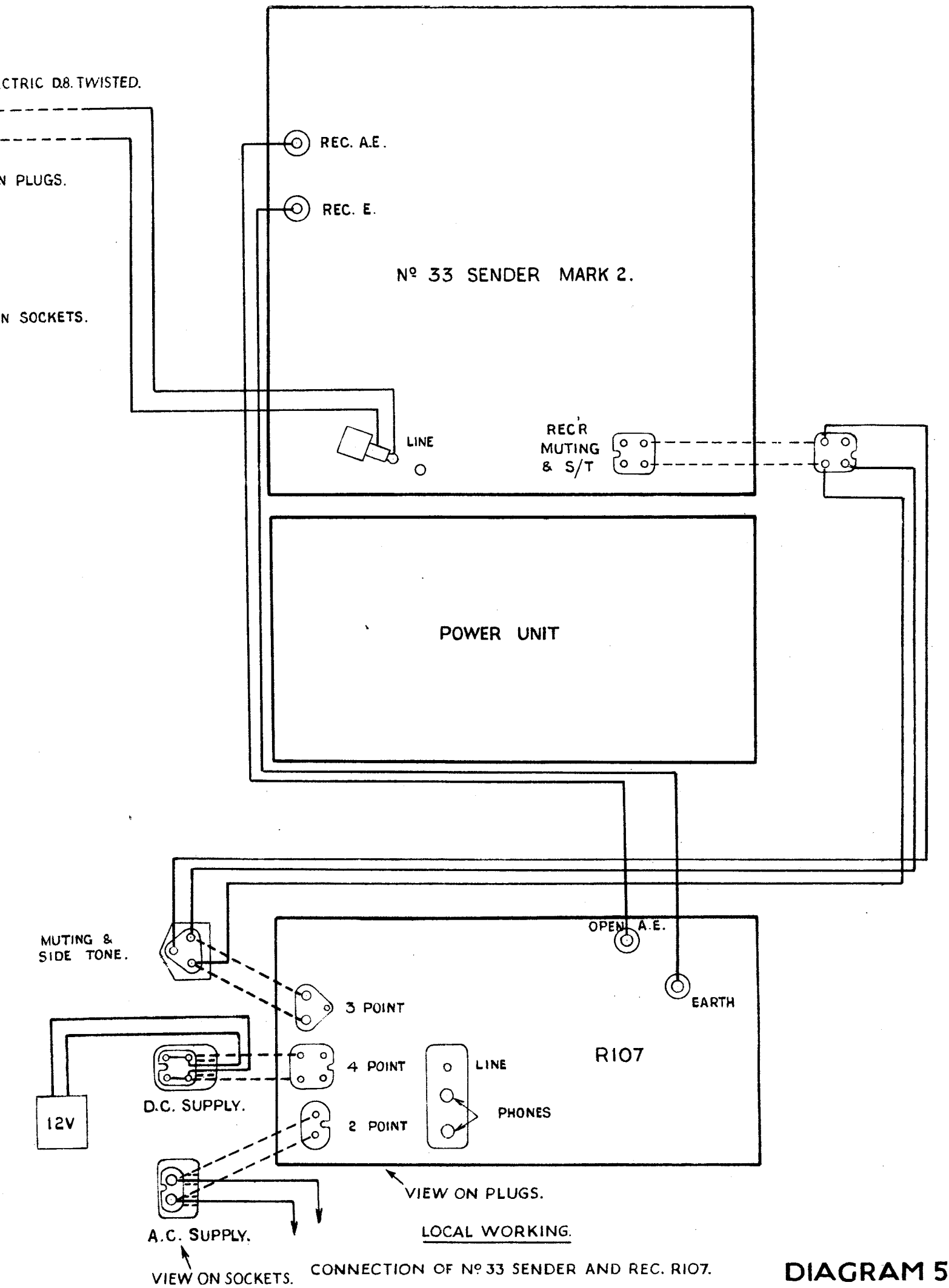

CONNECTION OF Nº 33 SENDER AND REC. R107.

DIAGRAM 5.

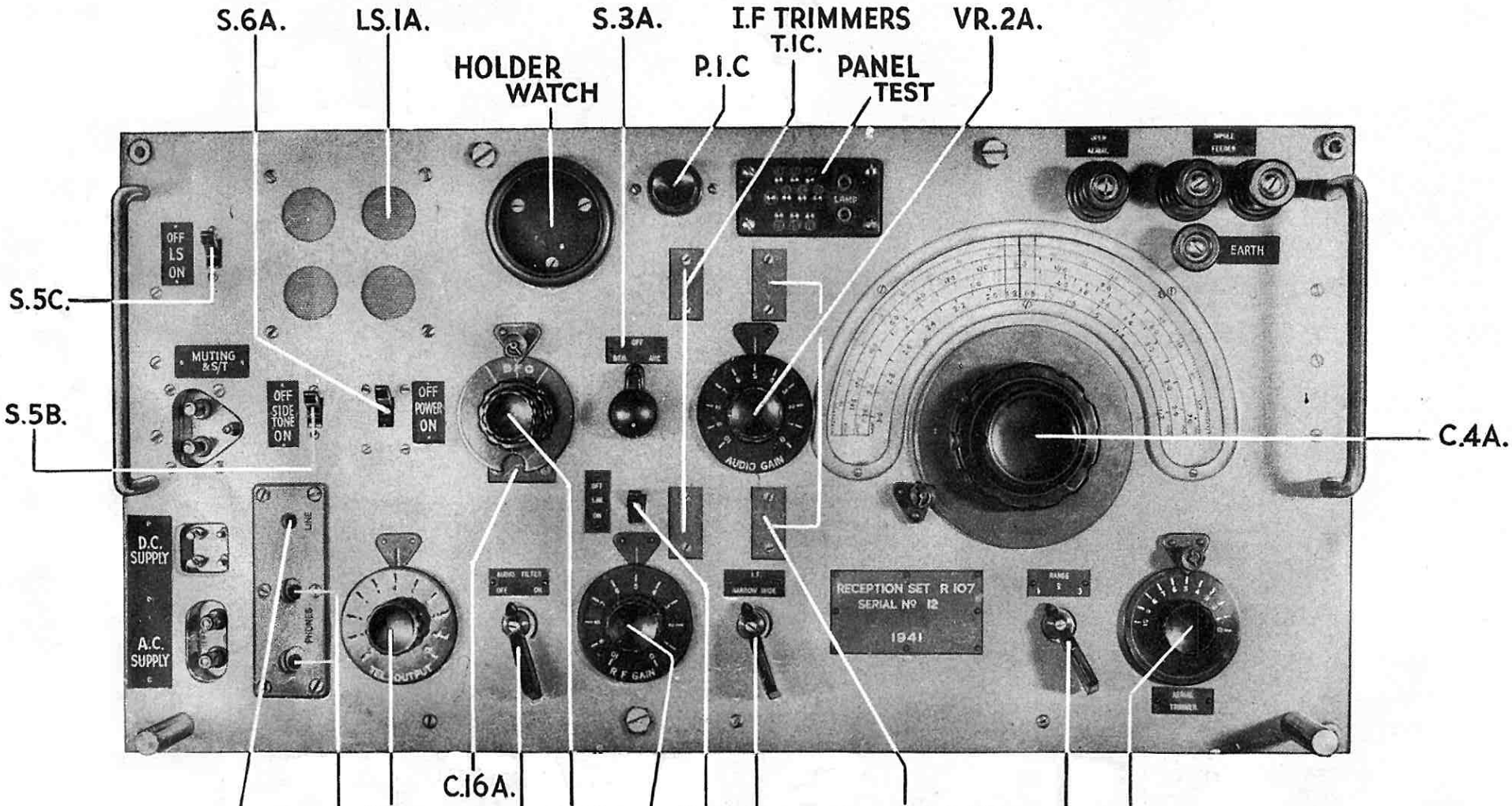

1/5/41

PLATE I
FRONT PANEL

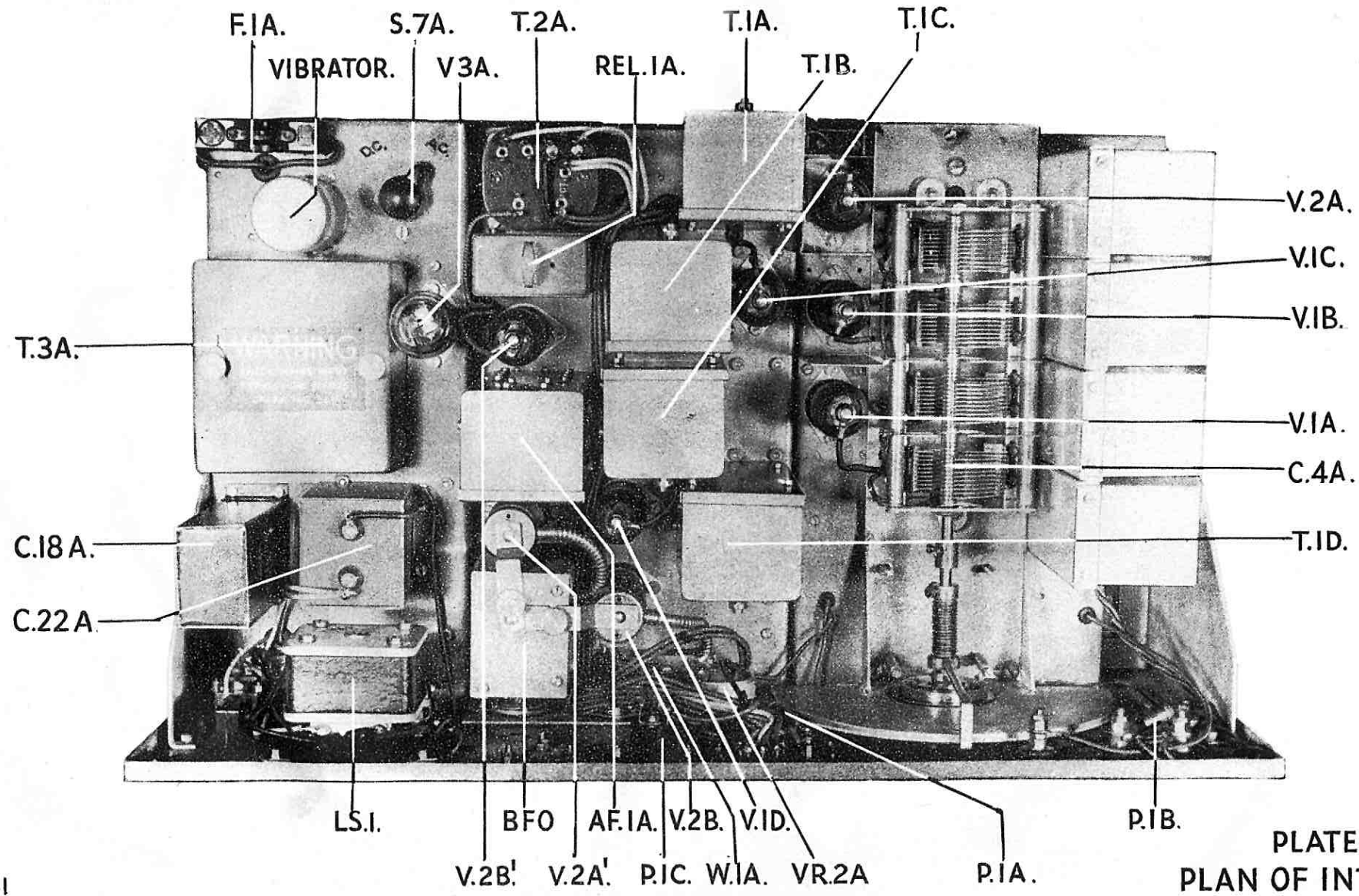

PLATE II
PLAN OF INTERIOR

1/5/41

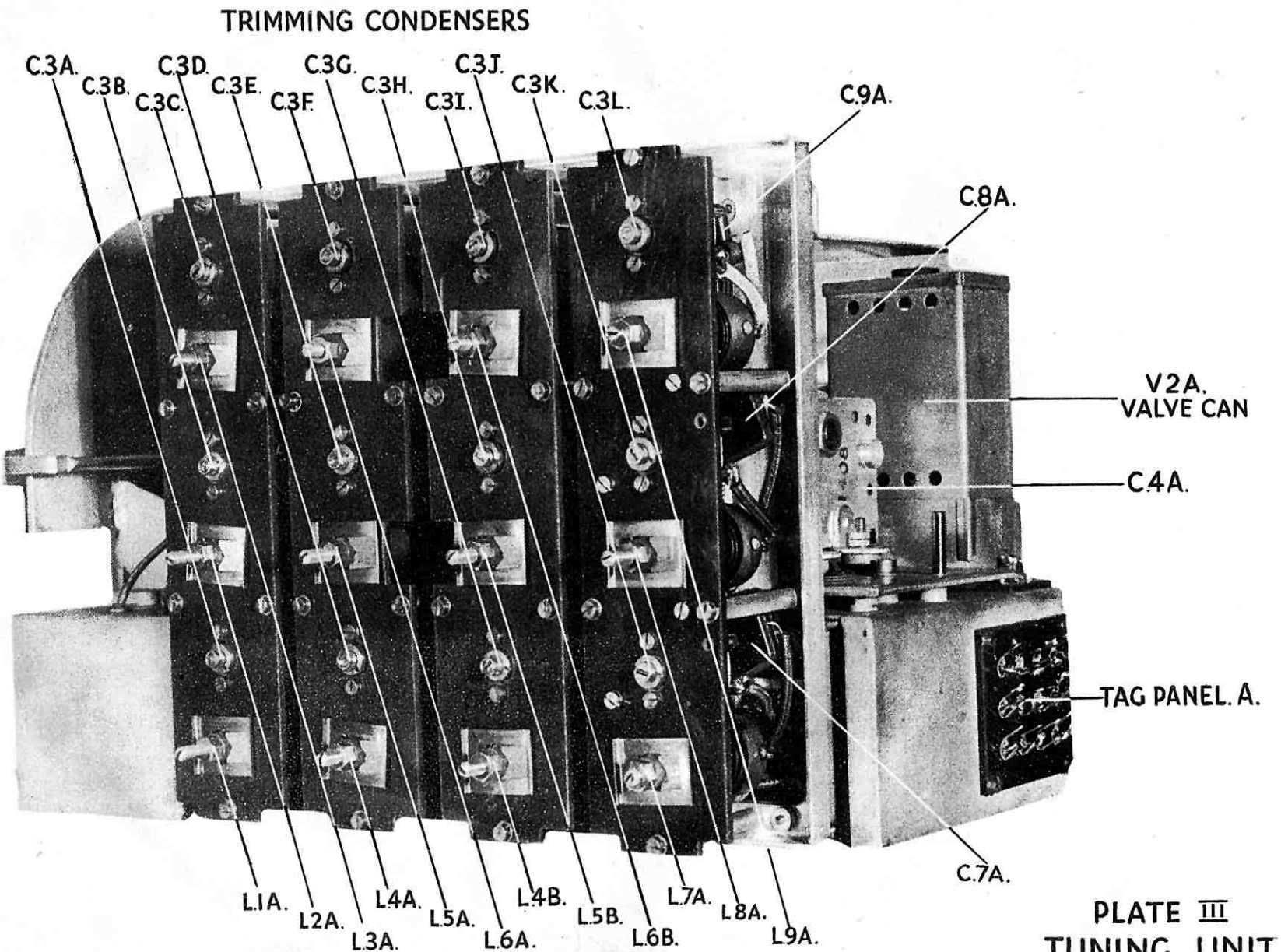

1/5/41

PLATE III
TUNING UNIT

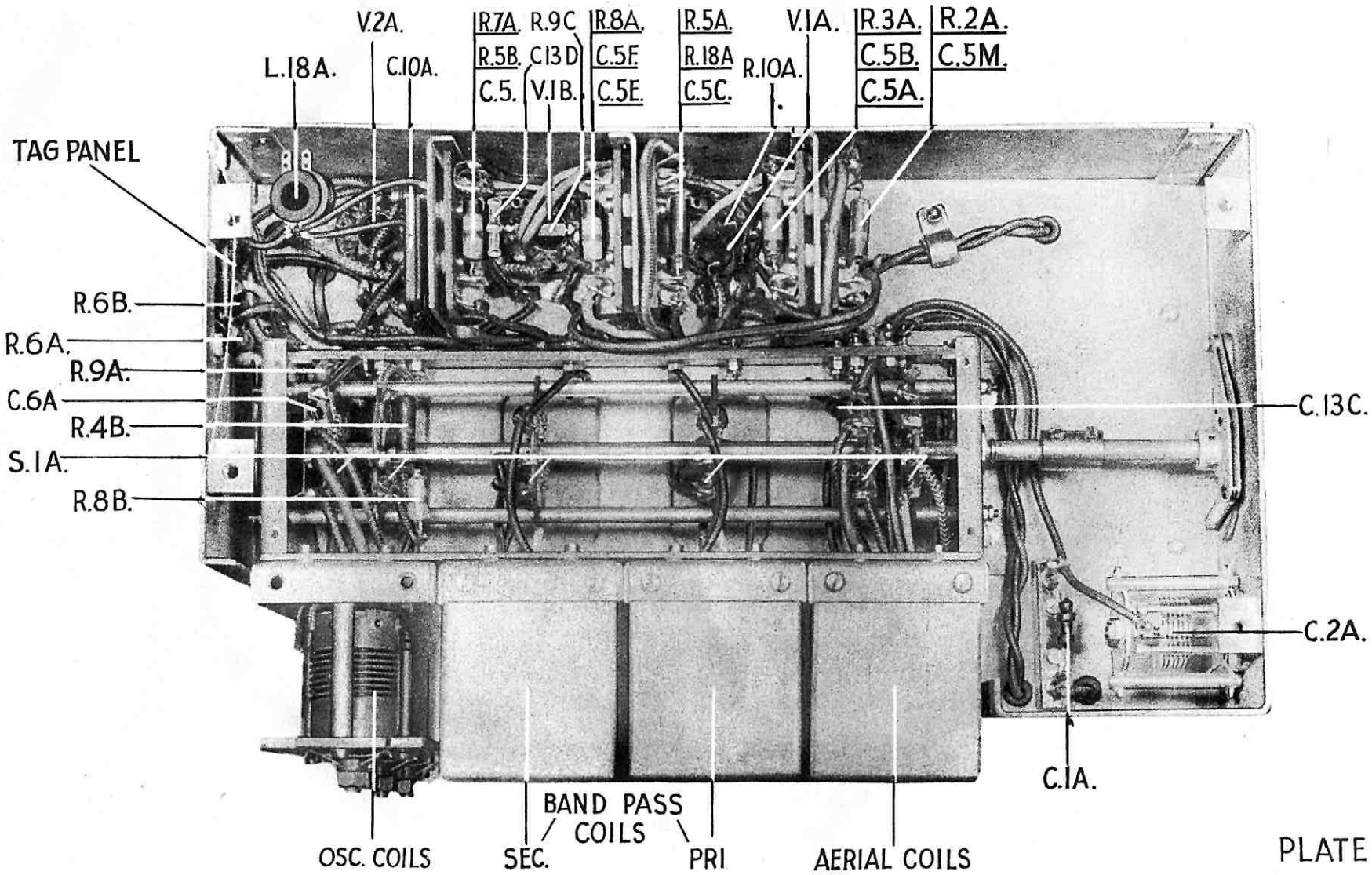

PLATE IV
UNDERSIDE OF R.F. CHASSIS

20/6/41

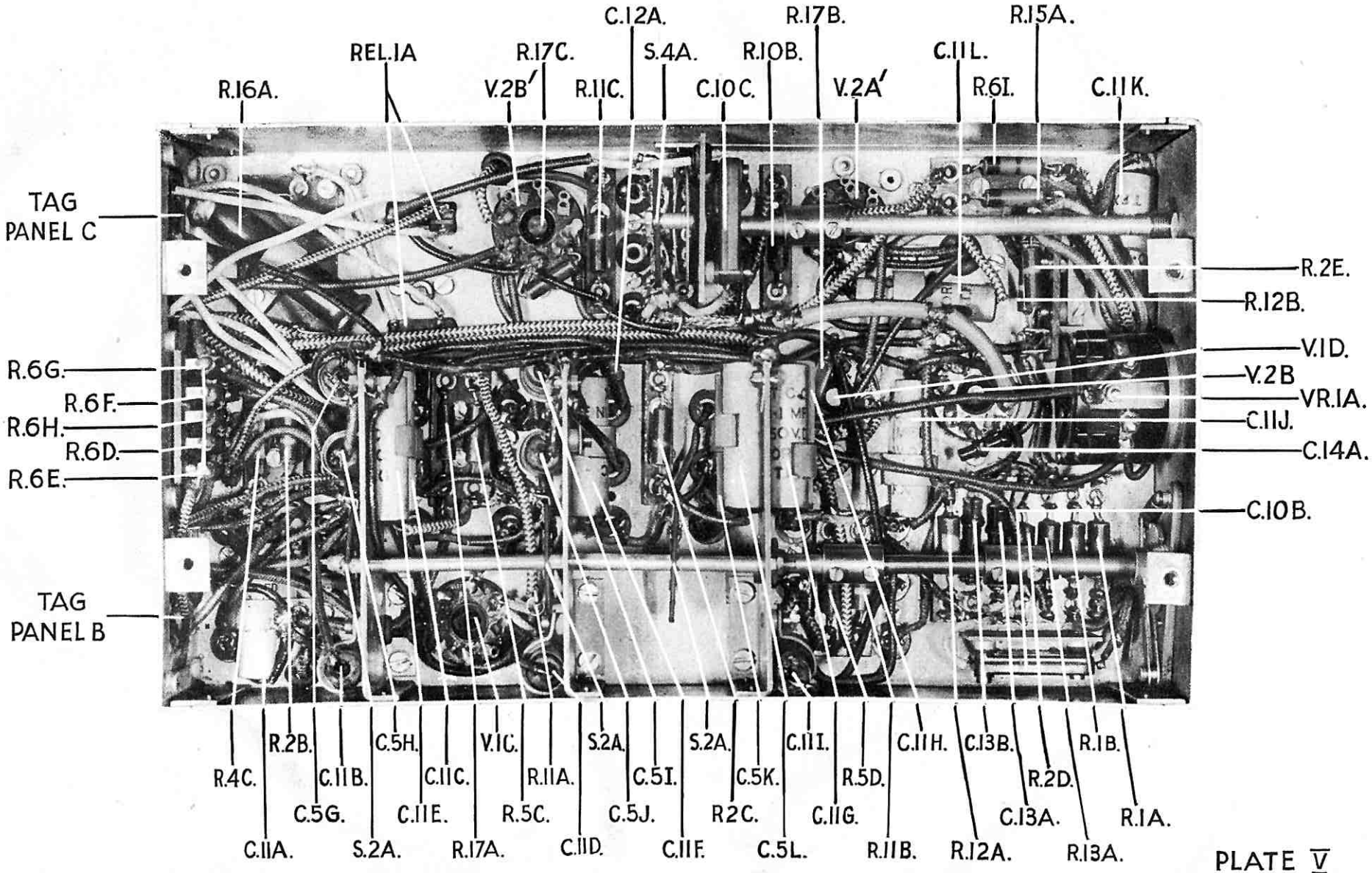

PLATE V
UNDERSIDE OF I.F. CHASSIS

1/5/41.

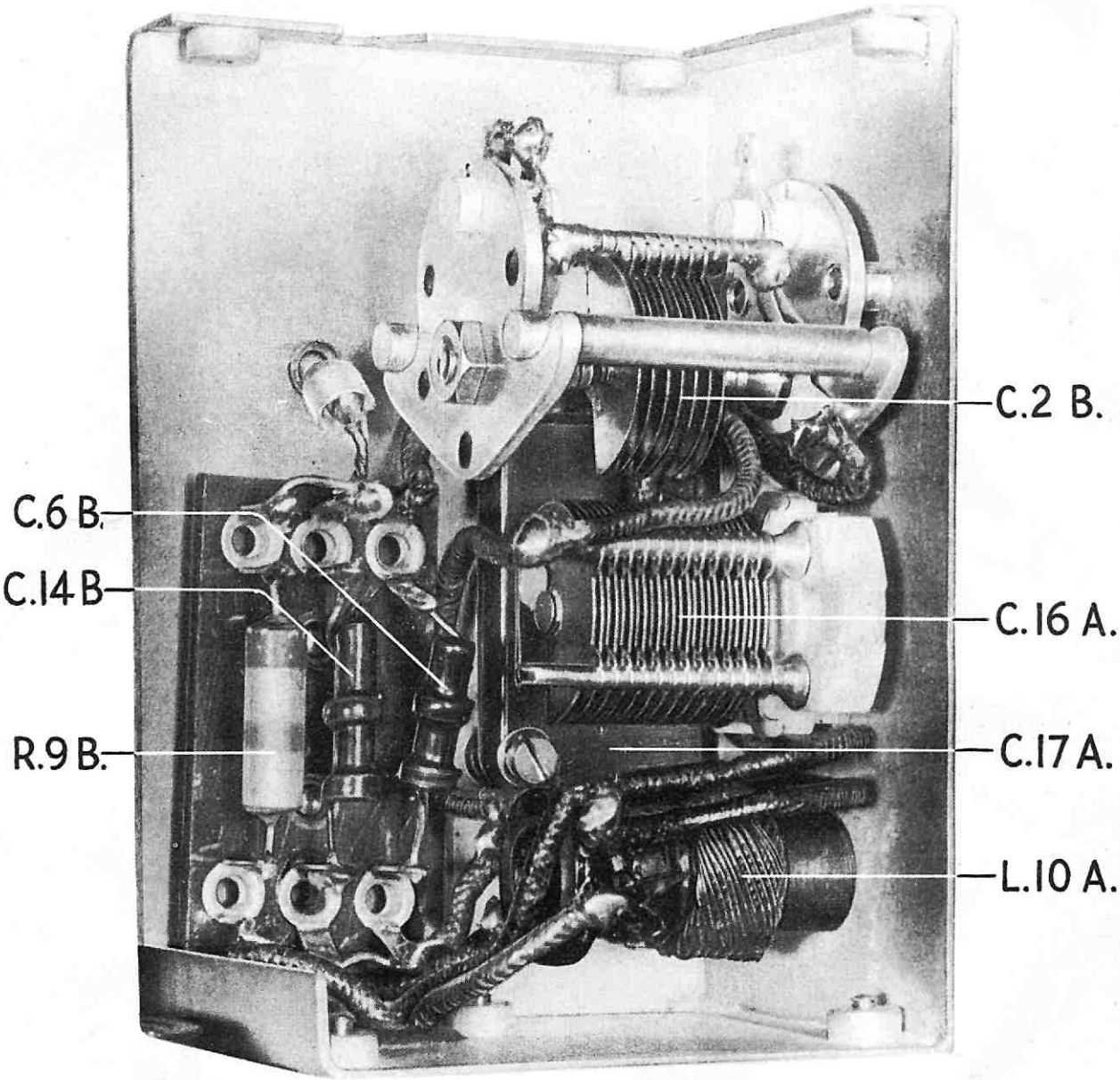

PLATE VI
INTERIOR OF B.F.O. UNIT.

1/5/41

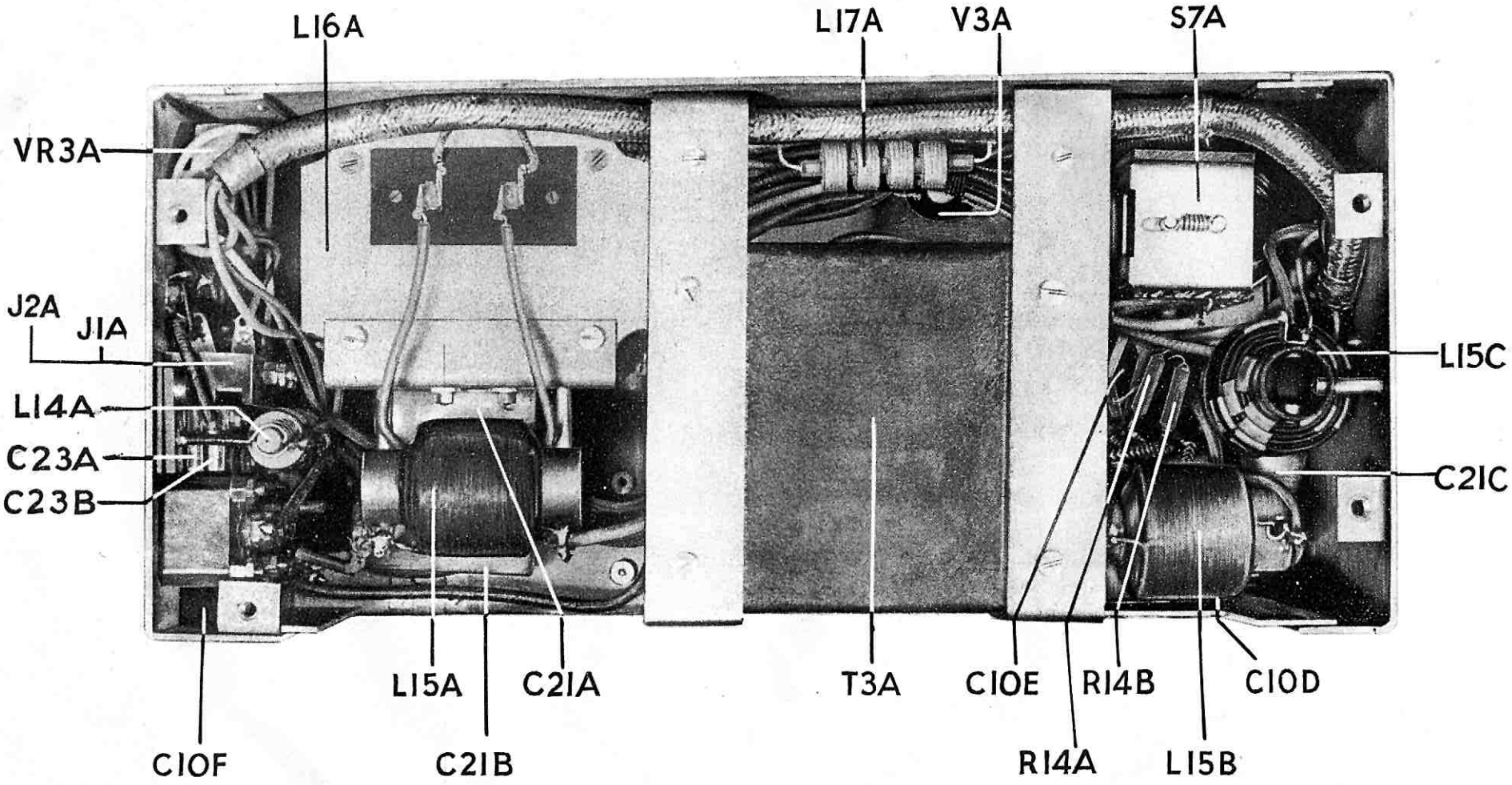

PLATE VII

UNDERSIDE OF POWER UNIT

20/6/41.